EchoWave®

Guided Wave Liquid Level Transmitter

FLOWLINE™
LEVEL BEST

LG10 & LG11 Series Quick Start



NRTL/C

©2019 Flowline, Inc.
All Rights Reserved
Made in USA

WELCOME TO THE ECHWAVE® LG10 & LG11 SERIES QUICK START

The EchoWave® Quick Start provides basic mounting, setup and use instructions for getting the EchoWave® up and running quickly. If you have a non-standard installation or setup requirement that is not addressed here, please refer to the EchoWave® Manual or other support documentation located at flowline.com.

WE DO YOUR LEVEL BEST

Thank you for purchasing EchoWave®. The sensor provides level measurement for your tank application. This Quick Start includes everything you'll need to get the sensor up and running.

SENSOR MODELS

Offered in three different models, EchoWave® a general-purpose, three-wire, guided wave radar level sensor that provides a continuous 4-20 mA current output proportional to the liquid level in a tank or sump. Make sure that the model purchased is appropriate for your application.

Part Number	Maximum Range	Probe Style	Mat'l of Const.	Thread	Fob	Components
LG10-0003-00-036	3' (0.91m)	Rod	316L SS	¾" NPT	No	Housing, feed-through, rod style probe
LG10-0003-01-036					Yes	
LG10-0013-00-036				¾" G	No	
LG10-0013-01-036					Yes	
LG10-0003-00-072	6' (1.83m)			¾" NPT	No	
LG10-0003-01-072					Yes	
LG10-0013-00-072				¾" G	No	
LG10-0013-01-072					Yes	
LG10-0003-00-118	9.8' (3m)			¾" NPT	No	
LG10-0003-01-118					Yes	
LG10-0013-00-118				¾" G	No	
LG10-0013-01-118					Yes	
LG10-1003-00-036	3' (0.91m)	Coaxial		¾" NPT	No	Housing, feed-through, coaxial style probe[1]
LG10-1003-01-036					Yes	
LG10-1013-00-036				¾" G	No	
LG10-1013-01-036					Yes	
LG10-1003-00-072	6' (1.83m)			¾" NPT	No	
LG10-1003-01-072					Yes	
LG10-1013-00-072				¾" G	No	
LG10-1013-01-072					Yes	
LG10-1003-00-118	9.8' (3m)			¾" NPT	No	
LG10-1003-01-118					Yes	
LG10-1013-00-118				¾" G	No	
LG10-1013-01-118					Yes	
LG11-2003-00	18.0' (5.5m)	Cable	316 SS	¾" NPT	No	Housing, feed-through, cable style probe[2]
LG11-2003-01					Yes	
LG11-2013-00				¾" G	No	
LG11-2013-01					Yes	

CONFIGURING ECHOWAVE®

EchoWave® is configured through WebCal®, a PC software program. Configuration of your sensor should be performed prior to mounting, since it requires connection to your PC.

STEP 1 - MEASURE THE TANK

Measuring the tank is one of the most important aspects in configuring the sensor. When measuring the tank, take into account the location of the sensor with respect to fittings, risers, dome tops and bottoms, and identify where the measurements are taken from the sensor. The SENSOR HEIGHT, PROBE LENGTH and MAX. FILL-H settings determine the 4-20mA span and are always measured from the bottom of the tank up.

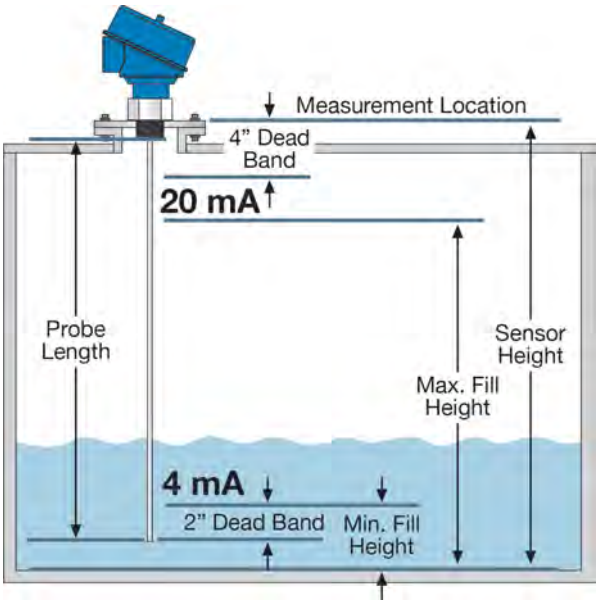

STEP 2: INSTALL WEBCAL® SOFTWARE

Download WebCal® software from www.flowline.com/webcal-software onto a PC with the following minimum specifications:

Windows® XP/Vista/7/8/10, 32 or 64-bit system, 10 MB storage space, 256 MB RAM, 1 USB® 2.0 port

You must have an active Internet connection to download WebCal®. Double-click the WebCal® installer to install software before proceeding to Step 2. Installer program will automatically install any required drivers.

STEP 3: CONNECT THE USB® FOB

NOTE: <u>Do not connect</u> the Fob to your computer until after you've installed WebCal® software.

The sensor communicates to WebCal® through the USB® Fob. Prior to plugging the Fob into your computers USB® port, ensure that all external power is disconnected from EchoWave®. The maximum distance between the computer and EchoWave® is 15'. Both the LI99-1001 Fob and LI99-2001 Fob are compatible with Echo Wave®.

1. Connect the red, green, white, and black wires from the EchoWave® to the corresponding colored terminals on the Fob.
2. Tighten the terminal screws with a slotted screwdriver.
3. Plug the Fob into your PC's USB® port.

Wiring identical for all series – Use only the Red, Black, Green and White wires.

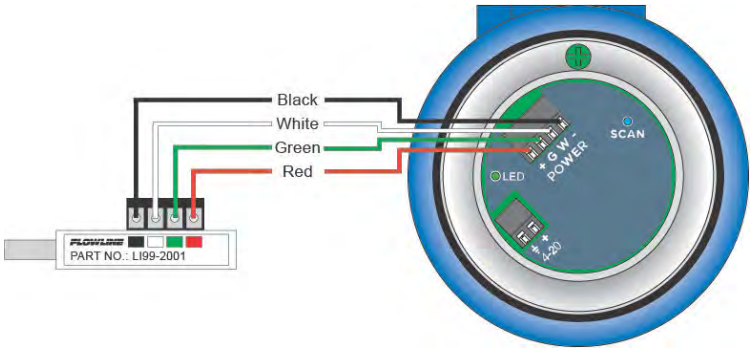

STEP 4 - SENSOR CONFIGURATION

Configures the relays in terms of pump/valve operations and level alarms as well as the setting fail-safe for relays and signal output.



Loop Fail-Safe - Allows selection of fail-safe current output if the sensor looses echo confidence (LOST).

Note: Choose *Hold Last Value* setting when your application level either falls below the end of the probe or rises above the Max. Fill-H setting.

Output at Empty - Allows selection of the orientation of the 4 to 20mA output (4 to 20 mA or 20 to 4 mA).

Startup Condition – Allows selection of the startup current when power is first applied to the sensor.

Probe Type – Allows selection of the type of probe attached to the feed-through. It is critical to select the correct type of probe.

Dielectric Range - Allows selection of the dielectric range, which sets the amplitude threshold within the sensor.

STEP 5 – DIMENSIONAL ENTRY

Distance Mode (default): Output of sensor is based on the distance (height of liquid) in the tank. Any change in liquid level will reflect linearly to the current output. The three values (Sensor Height, Probe Length and Fill-Height) below set the 4-20 mA current span for the sensor. All values will be set in the units shown under Height Units.

Height Units: Confirm units for use in Sensor Height and Fill-Height settings.

Sensor Height: Sets the location of the sensor above the bottom of the tank. It is based on the distance from the Empty level position to the Top of the Threads of the sensor (see below).

Probe Length: Sets the physical length of the probe. It is based on the distance from the end of the probe to the bottom of the mounting threads.

Maximum Fill-Height: Sets the location for 20mA. It is based on the distance from the Empty level position to the Full level position (see below).

Minimum Fill-Height: Sets the location for 4mA. It is based on the distance from the Empty level position to the bottom of the Probe plus 2” (The added 2” if due to the bottom dead band).

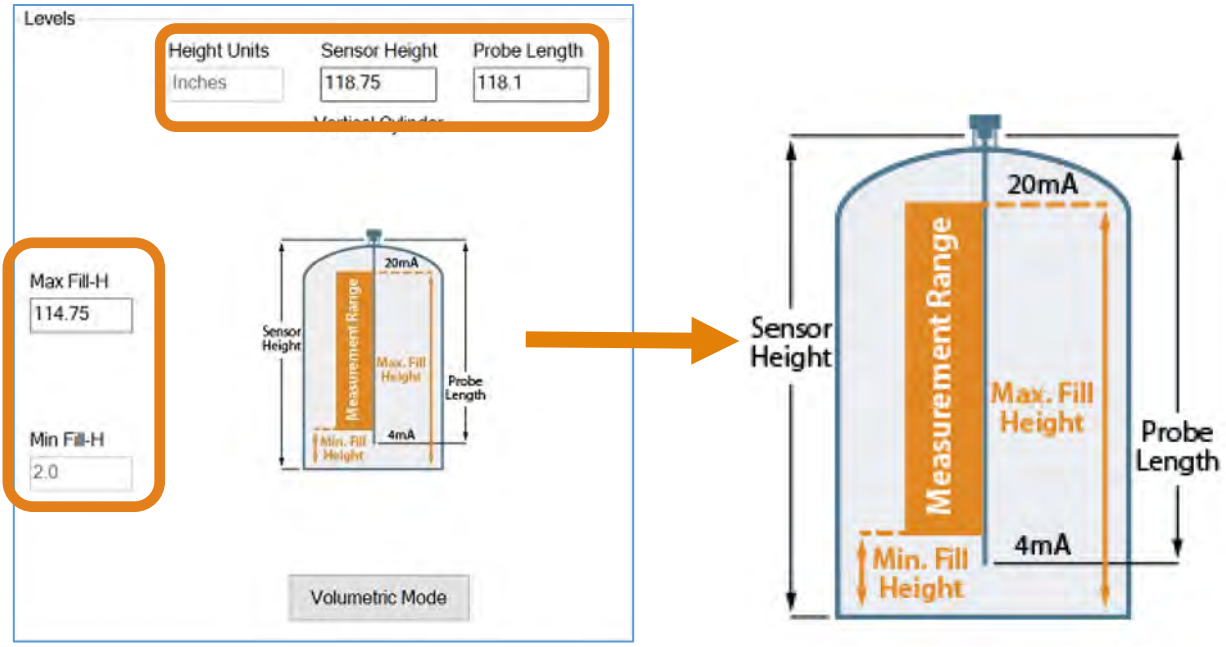

STEP 6 - TANK LEVEL CONFIRMATION

Verify the Height Units, Sensor Height, Probe Length, Max. Fill-Height & Min. Fill-Height Settings. All values were calculated and set in the previous Dimensional Entry window. Make any adjustments if required.

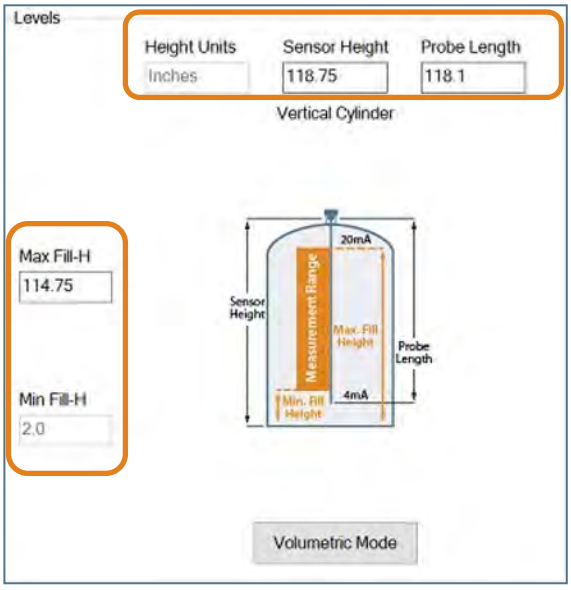

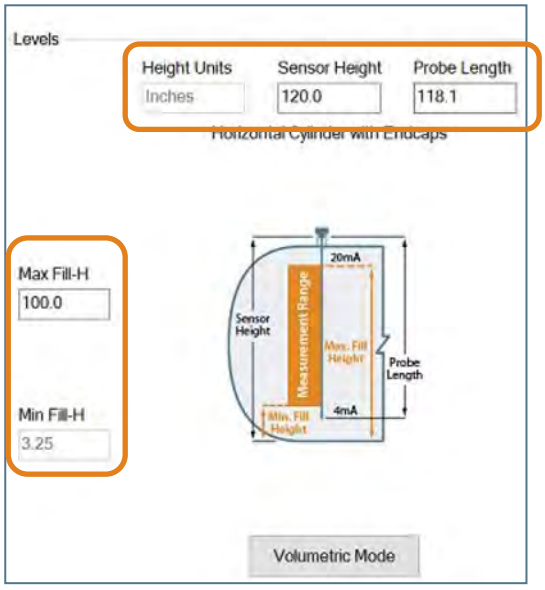

STEP 7 - WRITE TO UNIT

This WebCal®* operation uploads the configuration into the sensor, provides a custom wiring diagram specific to the signal output and/or relay configuration, and saves the configuration file to your hard drive.

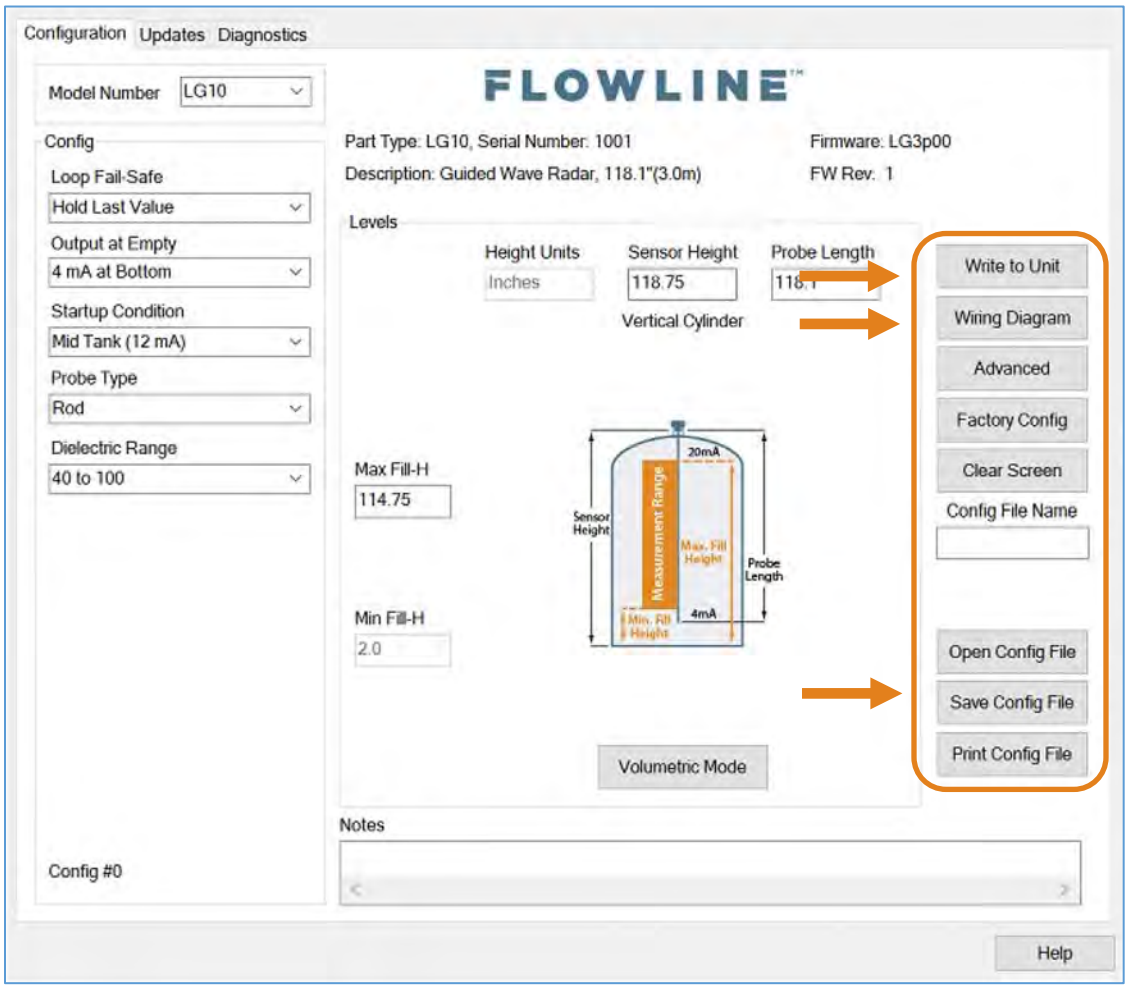

* For complete information on the WebCal® software, please refer to the WebCal® manual located at flowline.com/webcal-software.

Before configuration can be completed:

- You must click the **Write to Unit** button to save the settings to the unit.
- Then, click **Wiring Diagram** for a hard copy of the sensor's settings.
- Finally, enter the file name under which you wish to save the configuration file and click **Save Config File**.

Configuration is now complete.

Disconnect the USB® Fob before continuing to the next step: Mounting the EchoWave®.

STEP 8 - MOUNTING ECHOWAVE®

EchoWave® is mounted vertically into the tank via its connection thread. It is then screwed directly into a standard threaded tank connection, i.e. tank adapter, bushing, weld-in socket, or it can be screwed into a flange which is connected to a tank nozzle.

Always use metal fittings with the Rod Probe (LG10-0 series) and Cable Probe (LG11-2 series. The Coaxial Probe (LG10-1 series) can use any type of fitting material.

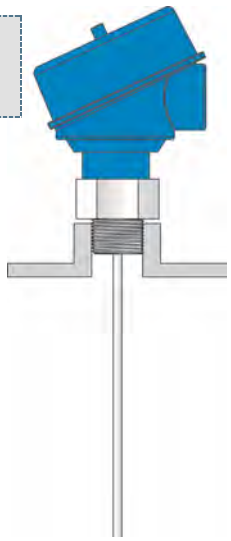

LG10/LG11 series should not be welded directly into the tank. Neither should flanges be welded onto the sensor. Welding on the metal parts of EchoWave® will cause serious damage to the transmitter.

Do not lift or handle the EchoWave® by its probe: This will cause excessive stress on the probe connection. EchoWave® should be handled by the hexagon or the lower section of the housing. Do not screw in the sensor by its housing. It should be tightened only via its hexagon (wrench size 32mm).

The end user has to ensure proper sealing of the sensor connection; based upon process conditions, i.e. temperature, pressure and resistance against the process liquid's atmosphere.

For NPT thread connections, pressure-tight joints require a sealant directly on the threads.

In the case that the LG10/LG11 series is delivered with a detached probe (cable version only), attach the probe onto the small threaded stud below the hexagon. Make sure to avoid cross threading or misaligning the threads.

MOUNTING CONSIDERATIONS

The probes should be installed so that they are not directly impacted by liquids flowing out of the filling inlet. They should neither touch nor sway towards other objects inside the tank or the tank/nozzle walls; e.g. by agitator or mixer swirls. In applications with very strong fluid movements which can also cause excessive lateral force on the probe, it is recommended to anchor the probe. The anchoring fixtures are end user supplied.

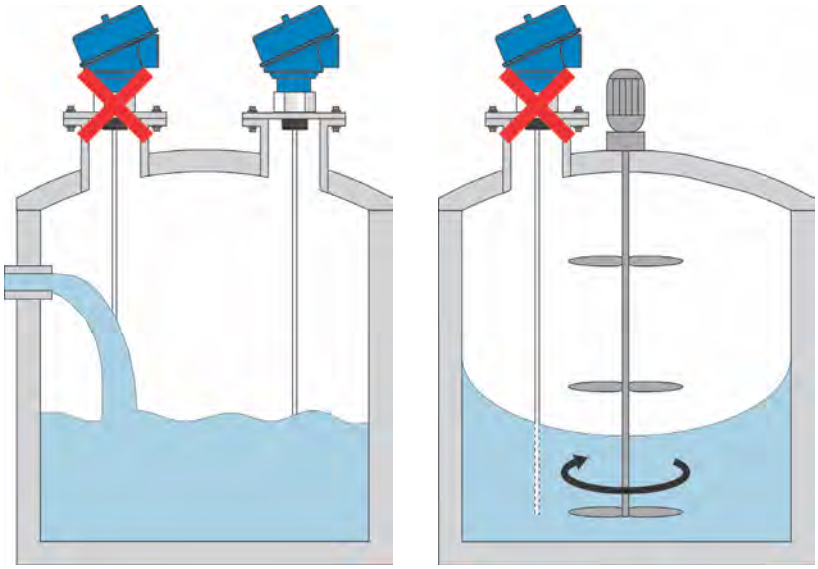

STEP 9 - WIRING ECHOWAVE®

Analog Output (4-20 mA): The analog output of the EchoWave® is a sourced 4-20 mA control circuit. The typical way to use this feature is to connect a positive supply to the (+) input terminal, a negative supply to the (-) input terminal and to connect the current output out of the 420 (+) terminal. The device that accepts the 4-20 mA current signal must reference the same negative supply listed above (see diagram below).

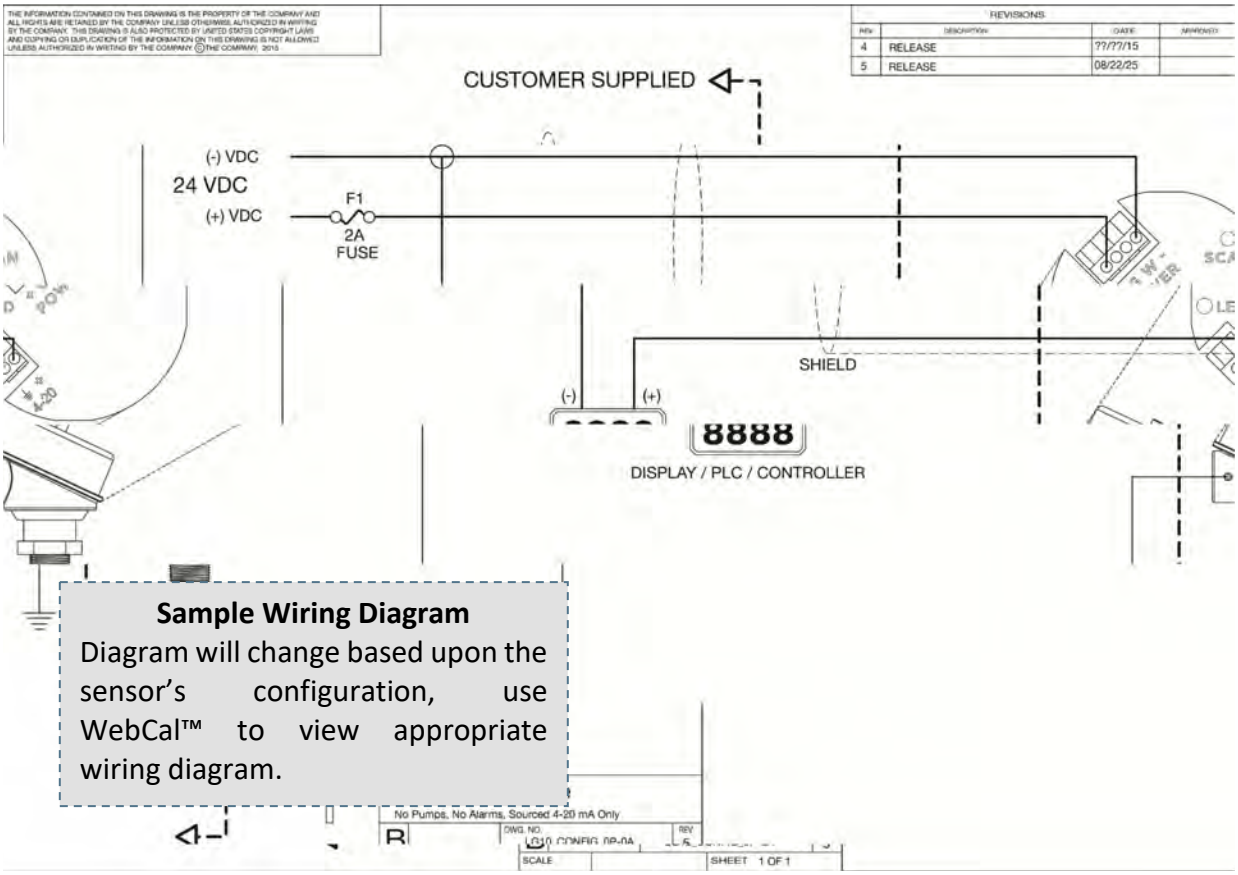

Sample Wiring Diagram
Diagram will change based upon the sensor's configuration, use WebCal™ to view appropriate wiring diagram.

The cabling should be shielded and twisted to minimize EMI interference. Its shield should be connected at either end and **never connected at both ends**. Typically 18 to 24 gauge wire is used in this application.

GENERAL NOTES FOR ELECTRICAL CONNECTIONS, USAGE AND SAFETY

- Where personal safety or significant property damage can occur due to a spill, the installation must have a redundant backup safety system installed.
- Wiring should always be completed by a licensed electrician.
- Protect the sensor from excessive electrical spikes by isolating the power, whenever possible.
- Supply voltage should never exceed 30 VDC.
- Make sure that the power supply does not have a current more than 2A or that there is 2A rated fuse in the electrical circuit that energizes the device.
- The sensor materials must be chemically compatible with the liquids to be measured.
- Design a fail-safe system for possible sensor and/or power failure.
- **Never use the sensor in environments classified as hazardous.**

WIRE CONNECTIONS

The housing has single cable entry and can be attached to screw plugs, cord grips or conduit with the ½" NPT thread. **Note:** the customer must confirm the suitability of those connectors for the specific application requirements and cabling; and replace them when necessary. IP66-rated screw plugs and cord grips have to be properly mounted and tightened around cable of suitable type and diameter to ensure the IP66 rating of the housing.

Note: Liquid-tight cord grip and ferrite beads are included with the sensor (see Specification Section for cord grip data).

Note: Always include the ferrite bed when using the cord grip or when using non-metallic conduit.

Ferrite Bead



Liquid-Tight Cord grip

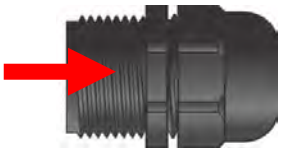

Note: Always shield the signal wire per instructions on the wiring diagram.

Conduit Connection

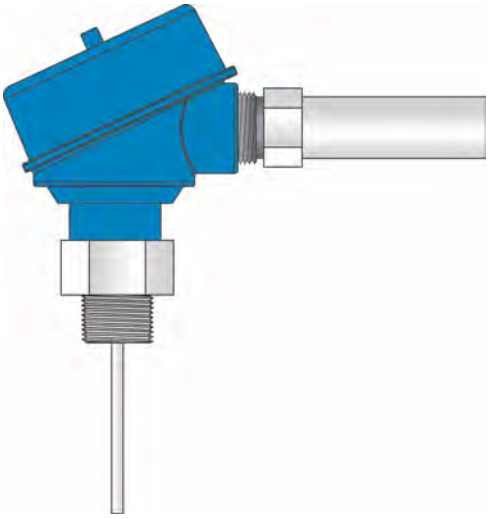

Cord Grip (Liquid Tight)

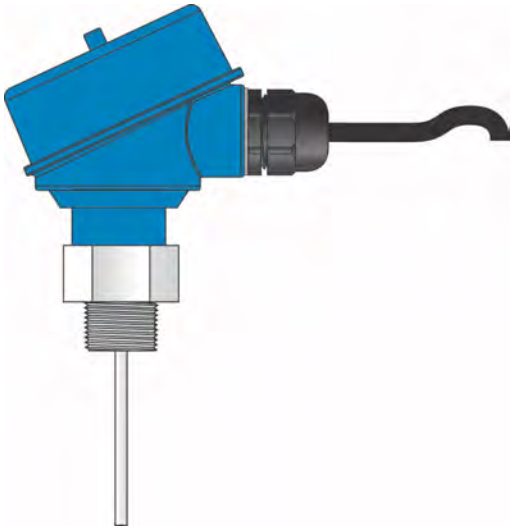

Avoid Condensation in the Conduit

You can give your instrument additional protection against moisture penetration by leading the conduit connection or cable downward in front of the cable entry. Condensation in the conduit will thus not enter the sensor enclosure.



COMMON WIRING TO DISPLAY, CONTROLLERS & PLC'S

DataView™ LI55 Series
Level Controller

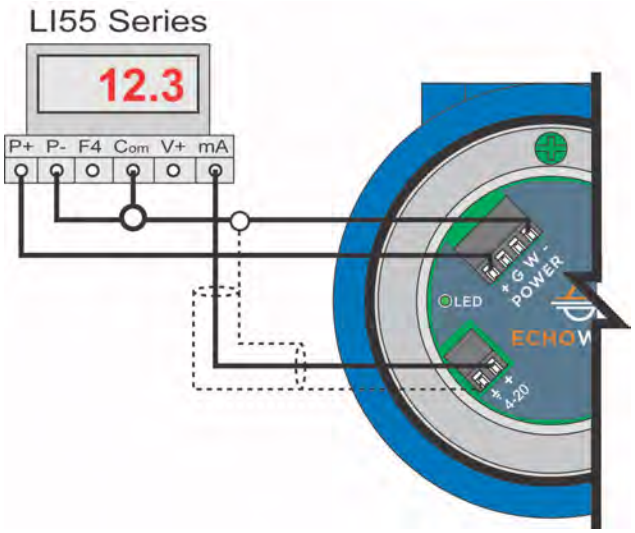

DataLoop™ LI23 Series
Level Indicator w/o Backlight

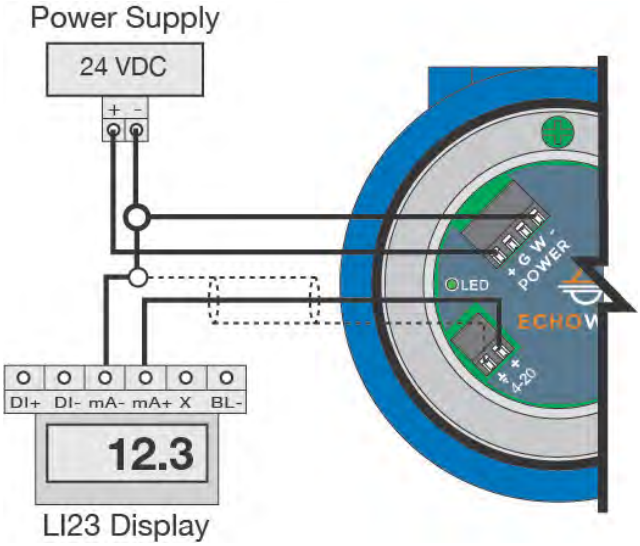

Generic Loop Powered Display

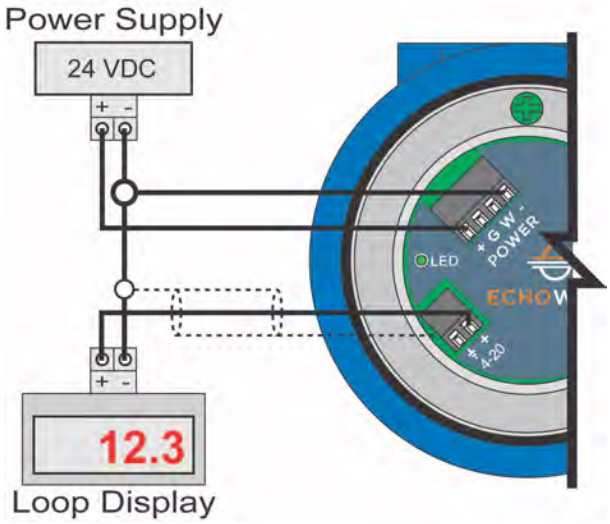

Generic PLC

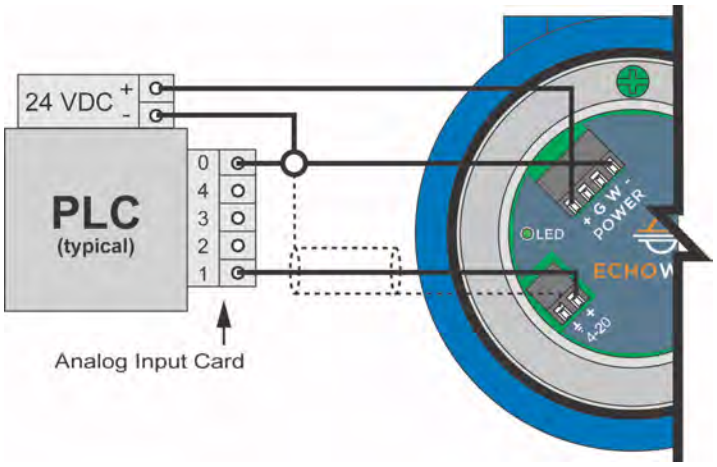

STEP 10 – PERFORM AN EMPTY SIGNAL SCAN

The Empty Signal Scan is a powerful disturbance signal suppression feature of EchoWave®. The sensor scans its entire probe length for any disturbance/interference signals within the application that could potentially be misinterpreted as level readings by memorizing and suppressing them during operation. Therefore, the LG10/LG11 series only recognizes the actual level signals caused by the liquid being measured.

The Empty Signal Scan is intended for the rod & cable probe, since its signal has a wider detection radius around the probe making it more responsive for measurement signal disturbances. An Empty Signal Scan is typically not required for the coaxial probe.

The Empty Signal Scan works most efficiently on stationary interference targets like tall and narrow risers or close-by objects/obstructions. To enable an Empty Signal Scan, the EchoWave® has to be mounted in its final position. The tank has to be completely empty. This will ensure a reliable identification of the actual disturbance signals only. In case there are non-stationary interference targets close to the rod probe (slowly rotating agitator blades or streams of liquid filling into the tank), it is recommended to use the coaxial probe.

ACTIVATE EMPTY SIGNAL SCAN

When EchoWave® is shipped, this feature is deactivated. To initiate a Empty Signal Scan, use the following instructions:

1. Make sure the LG10/LG11 series is installed in its final installation position.
2. Make sure the liquid is at its lowest level (empty).
    a. Performing an Empty Signal Scan when the tank is not empty will create an incorrect scan. It can affect the sensors performance especially at liquid levels below the Empty Signal Scan tank level.
3. Press and hold the SCAN button for 6 seconds.
    a. The LED will begin to flash Orange indicating the empty signal scan has begun, release the button.

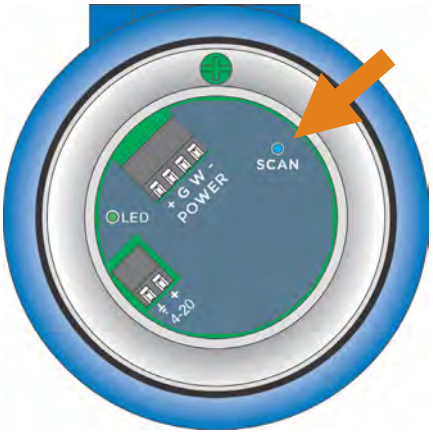

    b. Upon completion of the empty scan, a solid green LED will return
    c. If the empty scan is not successful. The LED will flash red

WARRANTY

Flowline warrants to the original purchaser of its products that such products will be free from defects in material and workmanship under normal use and service in accordance with instructions furnished by Flowline for a period of two years from the date of manufacture of such products. Flowline's obligation under this warranty is solely and exclusively limited to the repair or replacement, at Flowline's option, of the products or components, which Flowline's examination determines to its satisfaction to be defective in material or workmanship within the warranty period. Flowline must be notified pursuant to the instructions below of any claim under this warranty within thirty (30) days of any claimed lack of conformity of the product. Any product repaired under this warranty will be warranted only for the remainder of the original warranty period. Any product provided as a replacement under this warranty will be warranted for the full two years from the date of manufacture.

RETURNS

Products cannot be returned to Flowline without Flowline's prior authorization. To return a product that is thought to be defective, go to flowline.com, and submit a customer return (MRA) request form and follow the instructions therein. All warranty and non-warranty product returns to Flowline must be shipped prepaid and insured. Flowline will not be responsible for any products lost or damaged in shipment.

LIMITATIONS

This warranty does not apply to products which: 1) are beyond the warranty period or are products for which the original purchaser does not follow the warranty procedures outlined above; 2) have been subjected to electrical, mechanical or chemical damage due to improper, accidental or negligent use; 3) have been modified or altered; 4) anyone other than service personnel authorized by Flowline have attempted to repair; 5) have been involved in accidents or natural disasters; or 6) are damaged during return shipment to Flowline. Flowline reserves the right to unilaterally waive this warranty and dispose of any product returned to Flowline where: 1) there is evidence of a potentially hazardous material present with the product; or 2) the product has remained unclaimed at Flowline for more than 30 days after Flowline has dutifully requested disposition. This warranty contains the sole express warranty made by Flowline in connection with its products. ALL IMPLIED WARRANTIES, INCLUDING WITHOUT LIMITATION, THE WARRANTIES OF MERCHANTABILITY AND FITNESS FOR A PARTICULAR PURPOSE, ARE EXPRESSLY DISCLAIMED. The remedies of repair or replacement as stated above are the exclusive remedies for the breach of this warranty. IN NO EVENT SHALL FLOWLINE BE LIABLE FOR ANY INCIDENTAL OR CONSEQUENTIAL DAMAGES OF ANY KIND INCLUDING PERSONAL OR REAL PROPERTY OR FOR INJURY TO ANY PERSON. THIS WARRANTY CONSTITUTES THE FINAL, COMPLETE AND EXCLUSIVE STATEMENT OF WARRANTY TERMS AND NO PERSON IS AUTHORIZED TO MAKE ANY OTHER WARRANTIES OR REPRESENTATIONS ON BEHALF OF FLOWLINE. This warranty will be interpreted pursuant to the laws of the State of California. If any portion of this warranty is held to be invalid or unenforceable for any reason, such finding will not invalidate any other provision of this warranty.

For complete product documentation, video training, and technical support, go to flowline.com.
For phone support, call 562-598-3015 from 8am to 5pm PST, Mon - Fri.
(Please make sure you have the Part and Serial number available.)