EchoWave®

Guided Wave Liquid Level Transmitter

FLOWLINE™
LEVEL BEST

LG10 & LG11 Series Manual



EchoWave® utilizes TDR (Time Domain Reflectometry) technology. It is best described as low-energy, high-frequency electromagnetic impulses, generated by the sensor's circuitry that is propagated along the probe as it is immerged in the liquid to be measured. Impulses hit the surface of the media and part of the impulse energy is reflected back up the probe to the circuitry. Level Measurement is calculated from the time difference between the impulses sent and the impulses reflected. The sensor analyzes the level output as a continuous measurement reading from its analog output. TDR-Sensors are also known as Guided Radars or Guided Wave Radars (GWR).

NEW FEATURES

- Precise continuous level measurement in one device
- Complete galvanic insulation of device electronics from its inputs/outputs and the tank potential (no problems with electrochemical corrosion protection)
- Highly robust measurement due to 3-wire design, innovative signal analysis and disturbance signal suppression

TABLE OF CONTENTS

Introduction:....2
Specifications:.... 3-4
Dimensions:....5
About this Manual:....6
Getting Started (Setup Overview):....7
Part Numbers:....8
Probe Length:....9
Measurement Range:....12
Distance (Height of Liquid) vs. Volume of Liquid:....14
Installation (Mounting Considerations):....15
Installation Tips:....17-20
Wiring (Analog Output):....21
Common Wiring to Displays, Controllers & PLCs:....23-24
Configuration:....25
Step 1 – Install WebCal Software:....26
USB Fob Interface:....27
Step 2 – Measure the Tank:....28
Step 3 - Sensor Configuration:....29
Step 4 - Dimensional Entry:....30
Step 5 - Tank Level Configuration:....31
Step 6 - Write to Unit:....32
Empty Signal Scan:....32
Appendix:....34
Echo Curve:....34
Sensor Configuration:....35-37
Volumetric Configuration:....38-40
Tank Level Confirmation:....41
Write to Unit:....42
Cutting the Probe:....43-45
Troubleshooting:....47
Warranty:....48

ELECTRICAL

Analog output:	4 to 20mA
Total load resistance:	< 250Ω
Lower range value:	4.0mA (span 0%)
Upper range value:	20.0mA (span 100%)
Supply voltage:	10 to 30VDC (reverse-polarity protected)
Current consumption:	<50mA at 24VDC
Start-up time:	<6s
Cable terminals:	Terminal block [wires 16 to 26 AWG (solid or stranded)]

MEASUREMENT

Reference condition:	(dielectric constant [εr] =80, water surface, tank 01m, DN200 metal flange)	
Accuracy:	±3mm	
Repeatability:	<2mm	
Resolution:	<2mm	
Probe type:		
Rod:	4mm	
Cable:	4mm, type 7x19	
Coaxial:	21.34mm (NPT ½", sch. 40)	
Probe length	[can be ordered in 5mm (0.2”) increments from the reference point]	
Rod:	0.61 to 3.0m (2’ to 9.8’)	
Cable:	1.0 to 5.5m (3.3’ to 18’)	
Coaxial:	0.61 to 3.0m (2’ to 9.8’)	
Probe loading		
Rod:	Maximum lateral load:	6Nm… (0.2kg at 3 m)
Cable:	Maximum tensile load:	5kN
Coaxial:	Maximum lateral load:	100Nm… (1.67kg at 6 m)
Top dead band:	100mm (4”)	
Bottom dead band:	50mm (2”)	

APPLICATION SPECIFICATIONS

Intended Installation:	
Rod:	Metallic tank or below grade concrete basin
Cable:	Metallic tank or below grade concrete basin
Coaxial:	Non-metallic, plastic, fiberglass or metallic tank or below grade concrete basin
Dielectric [εr]	>1.8
Conductivity:	No restrictions
Density:	No restrictions

APPLICATION SPECIFICATIONS (CONTINUED)

Process temperature		
Rod:	F: -40° to 302°	C: -40° to 150°
Cable:	F: -40° to 302°	C: -40° to 150°
Coaxial:	F: -40° to 266°	C: -40° to 130°
Ambient temperature		
Operation:	F: -13° to 176°	C: -25° to 80°C
Storage:	F: -40° to 185°	C: -40° to 85°C
Application pressure:	-14.5 to 250 psi	-1bar to 17.2bar
Rate of level change:	1”/s	

MECHANICAL SPECIFICATIONS

Wetted materials:	
Rod:	1.4404 / 316L, PEEK
Cable:	1.4401 / 316, PEEK
Coaxial:	1.4404 / 316L, PEEK
Housing materials	
Housing rating:	IP66, NEMA 4
Cable entries:	Single cable entry ½” NPT
Cord grip:	½” NPT, Ferrite Bead included
Cord grip material:	Nylon
Cord grip cable	
Minimum size:	0.170” (4.3mm)
Maximum size:	0.450” (11.4mm)
Process mount:	¾”NPT (G)
Certification:	$_{c}$CSA$_{us}$: UL Std. No 61010-3 (3rd edition) & CAN/CSA-C22.2 No. 61010-1-12
Compliance:	CE: EN61326-1: 2013 & EN55011 Class A Group 1 CRN RoHS

Housing body and cover:	Aluminum alloy EN AC-AlSi9Cu3 (DIN EN 1706), epoxy spray coating (~70µm) other alloys and coatings on request.
Cover o-ring:	Silicone rubber (Elastosil R 750/50)
Screws; cover locking screw:	1.4301 / 304 external earth terminal
Screw:	Tin plated stainless steel 1.4301 / 304

DIMENSIONS

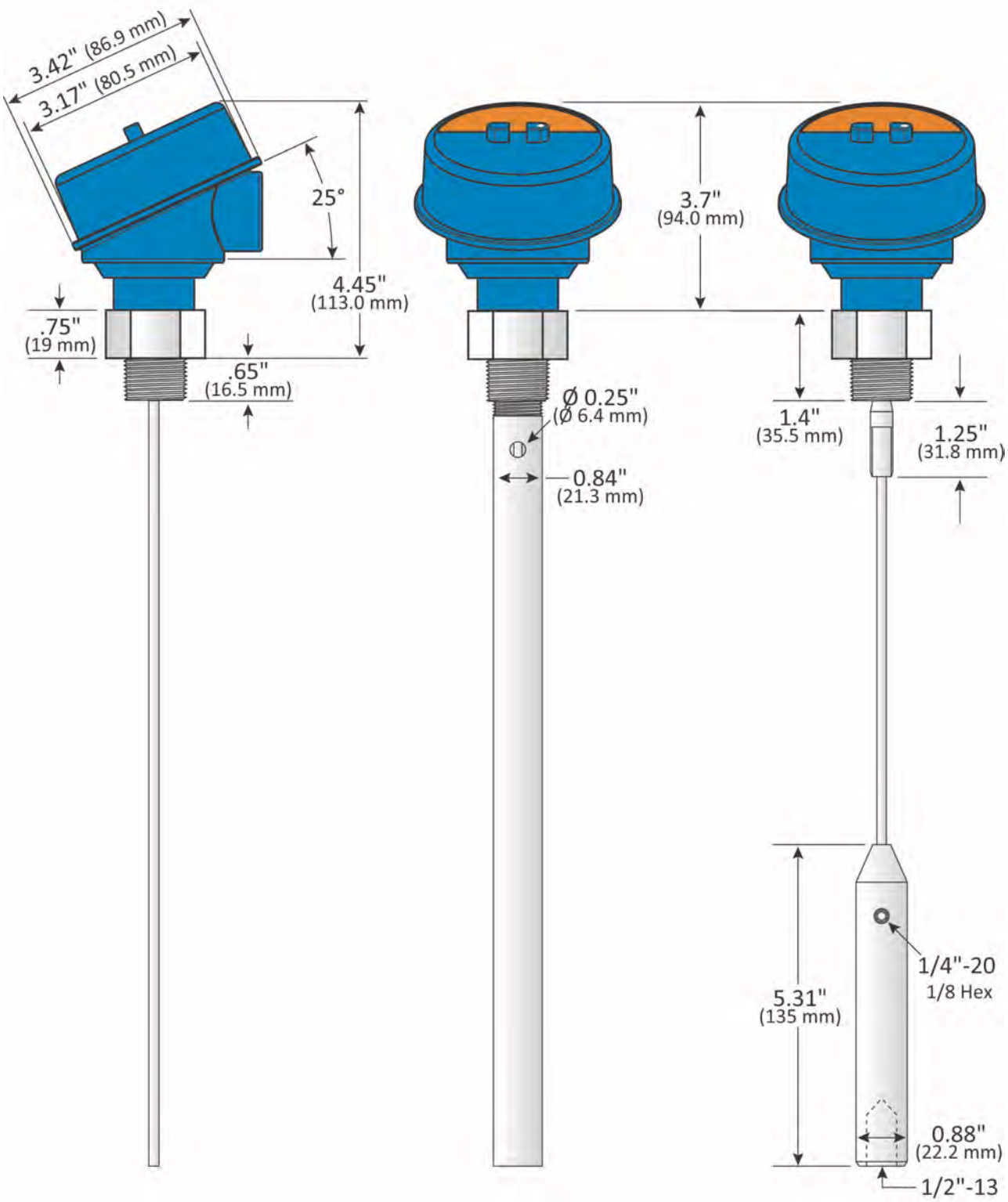
3.42" (86.9 mm)
3.17" (80.5 mm)
25°
4.45"
(113.0 mm)
.75"
(19 mm)
.65"
(16.5 mm)
3.7"
(94.0 mm)
Ø 0.25"
(Ø 6.4 mm)
0.84"
(21.3 mm)
1.4"
(35.5 mm)
1.25"
(31.8 mm)
1/4"-20
1/8 Hex
5.31"
(135 mm)
0.88"
(22.2 mm)
1/2"-13

⚠ **About this Manual:** PLEASE READ THE ENTIRE MANUAL PRIOR TO INSTALLING OR USING THIS PRODUCT. This manual includes information on the EchoWave® series Guided Wave Radar Level Transmitter from Flowline®. Please refer to the part number located on the switch label to verify the exact model configuration, which you have purchased.

⚠ **User's Responsibility for Safety:** Flowline® manufactures a broad range of level sensing technologies. While each of these sensors is designed to operate in a wide variety of applications, it is the user's responsibility to select a sensor model that is appropriate for the application, install it properly, perform tests of the installed system, and maintain all components. The failure to do so could result in property damage or serious injury.

⚠ **Proper Installation and Handling:** Only professional staff should install and/or repair this product. Never over tighten the sensor within the fitting. Always check for leaks prior to system start-up.

⚠ **Wiring and Electrical:** A supply voltage of 10 to 30 VDC is required to power the EchoWave®. Electrical wiring of the transmitter should be performed in accordance with all applicable national, state, and local codes.

⚠ **Material Compatibility:** The enclosure is made of metal. Make sure that it is chemically compatible with the application media.

⚠ **Enclosure:** While the sensor housing is liquid-resistant the EchoWave® is not designed to be operational when fully immersed. It should be mounted to insure the enclosure does not come into contact with the application media under normal operational conditions. The probe is designed for full liquid contact.

Note: If using the Flowline® LM90-1001 (liquid tight fitting) on the ½" conduit, the cable minimum is 0.170" (4.3mm) and the maximum is 0.450" (11.4mm).

- **Handling Static-Sensitive Circuits/Devices:** When handling the transmitter, the technician should follow these guidelines to reduce any possible electrostatic charge build-up on the technician's body and the electronic part.

1. Always touch a known good ground source before handling the part. This should be repeated while handling the part and more frequently after sitting down from a standing position, sliding across the seat or walking a distance.
2. Avoid touching electrical terminals of the part unless making connections.
3. DO NOT open the unit cover until it is time to calibrate.

⚠ **Make a Fail-Safe System:** Design a fail-safe system that accommodates the possibility of switch and/or power failure. Flowline® recommends the use of a redundant backup system and alarm in addition to the primary system.

⚠ **Flammable, Explosive or Hazardous Applications:** The EchoWave® sensor is not certified for application in a hazardous location.

SETUP OVERVIEW

Below highlights the initial steps in setting up your sensor for operation.

1. **Check Part Number** (Section Two)
    a. Confirm that the sensor's part number matches the ordered part number and all components are provided with the model delivered.
2. **Measure Probe & Installation** (Section Two)
    a. Prior to installation, measure the length of the probe. Confirm that the probe length matches the actual installation location.
    b. If the probe length is too long, refer to Cutting the Probe in Section 7.
    c. Understand the location of the sensor's Measurement Range as well as Minimum Fill-Height and Maximum Fill-Height settings.
3. **Install the sensor** (Section Three)
    a. Section 3 contains information on the location and mechanical installation of the sensor.
4. **Wire the sensor** (Section Four)
    a. Section 4 contains information on electrical wiring and power requirements for the sensor.
5. **Configure Sensor with WebCal™** (Section Five)
    a. Section 5 contains information on using the WebCal® configuration software.
6. **Perform an Empty Scan** (Section Six)
    a. Section 6 contains information on how to run an empty scan.
    b. An empty scan may not be required on a sensor that has a coaxial probe.

Components: EchoWave® is offered in 28 different models. Depending on the model purchased, you may or may not have been shipped the configuration component shown below.

Part Number	Maximum Range	Probe Style	Mat'l of Const.	Thread	Fob	Components
LG10-0003-00-036	3' (0.91m)	Rod	316L SS	¾" NPT	No	Housing, feed-through, rod style probe
LG10-0003-01-036					Yes	
LG10-0013-00-036				¾" G	No	
LG10-0013-01-036					Yes	
LG10-0003-00-072	6' (1.83m)			¾" NPT	No	
LG10-0003-01-072					Yes	
LG10-0013-00-072				¾" G	No	
LG10-0013-01-072					Yes	
LG10-0003-00-118	9.8' (3m)			¾" NPT	No	
LG10-0003-01-118					Yes	
LG10-0013-00-118				¾" G	No	
LG10-0013-01-118					Yes	
LG10-1003-00-036	3' (0.91m)	Coaxial		¾" NPT	No	Housing, feed-through, coaxial style probe[1]
LG10-1003-01-036					Yes	
LG10-1013-00-036				¾" G	No	
LG10-1013-01-036					Yes	
LG10-1003-00-072	6' (1.83m)			¾" NPT	No	
LG10-1003-01-072					Yes	
LG10-1013-00-072				¾" G	No	
LG10-1013-01-072					Yes	
LG10-1003-00-118	9.8' (3m)			¾" NPT	No	
LG10-1003-01-118					Yes	
LG10-1013-00-118				¾" G	No	
LG10-1013-01-118					Yes	
LG11-2003-00	18.0' (5.5m)	Cable	316 SS	¾" NPT	No	Housing, feed-through, cable style probe[2]
LG11-2003-01					Yes	
LG11-2013-00				¾" G	No	
LG11-2013-01					Yes	

- The above are standard length models. For custom length probes, add a length dimension to the end of the part number (i.e. LG10-0003-01-060" or LG11-2003-01-4.5m). Be sure to indicate the units of measurement.
- Coaxial style probe[1] - includes rod, threaded ½" tube and spacers
- Cable style probe[2] - includes counterweight
- Quick Start

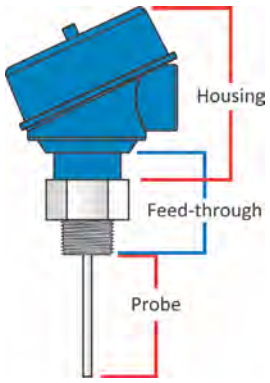

UNDERSTANDING SENSOR HEIGHT

This is a critical setting for EchoWave®. Sensor Height defines the height of the sensor above the bottom of the tank. The height value must take into account the shape of the tank and any risers, fittings, structures or extensions associated with the tank or the installation (see examples below). The reference point for definition of the Sensor Height is always the bottom of the mounting nut.

Simple Tank

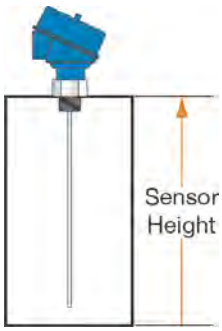

Dome Top Raises Sensor Height (SH)

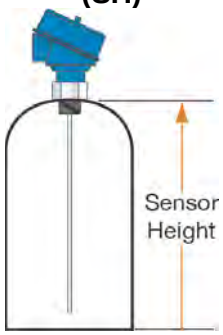

Sensor Off Center Changes SH

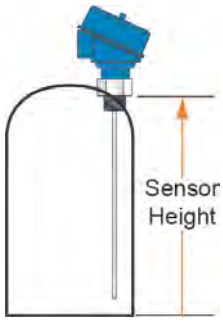

Simple Open Top Tank

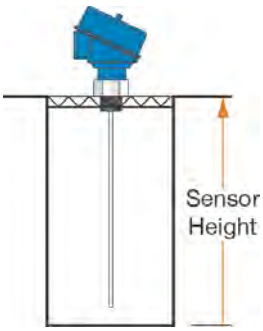

Sensor Extends into Sump Lowering SH

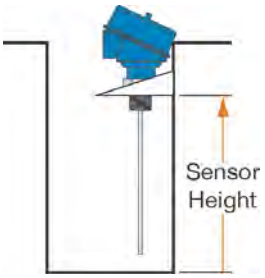

Cone Bottom Raises Sensor Height

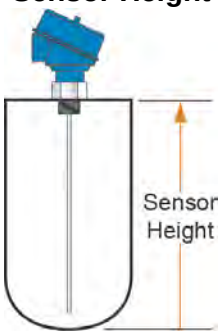

Mounting Fixture Raises Sensor Height

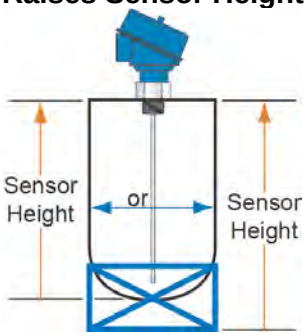

Simple Tank

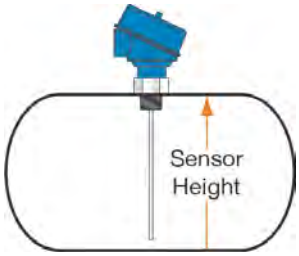

Riser Raises Sensor Height

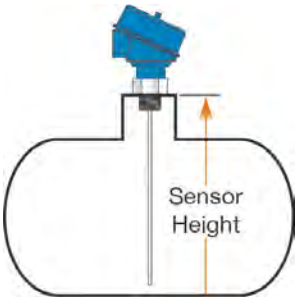

UNDERSTANDING PROBE LENGTH

The reference point for definition of the probe length [**Length**] is always the bottom of the threads [bottom of the feed through (see below)]. **Note:** This is a different reference location from the Sensor Height. The probe **Length** is an important mechanical dimension which is needed to make sure the probe physically fits into the tank at the anticipated mounting location. Probe length has an influence on the actual measuring range of the sensor, but it is a different aspect of the sensor.

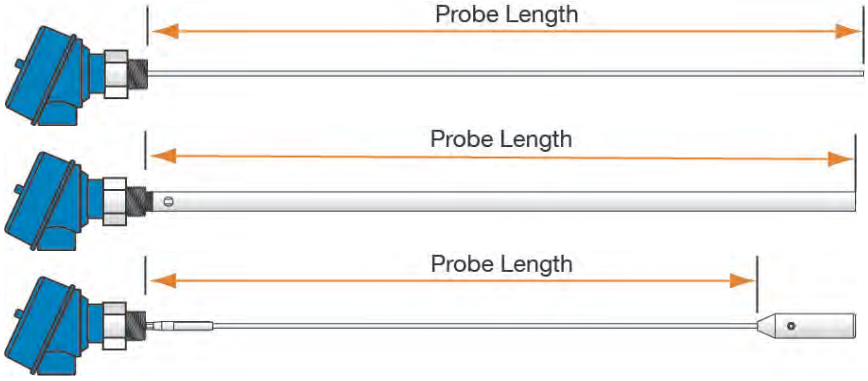

Rod Probe

Coaxial Probe

Cable Probe

Note: Sensor Height and Probe Length have different reference points for measurement..

UNDERSTANDING INSTALL LOCATION LENGTH

Measure the space below the actual installation location for the sensor. This distance (install length) must be greater than the probe length. In many tanks, the install length corresponds to the height of the tank. With dome top, cone bottom and horizontal tanks, include the added height of the curved surface. Be sure to take into account the height of fittings, risers, tank flats etc. which may be added for installation. All of the above can raise the bottom of the probe higher in the tank than what was originally expected resulting in a reduced lowest level of measurement (see Measurement Range).

Tank with Flat Top & Flat Bottom

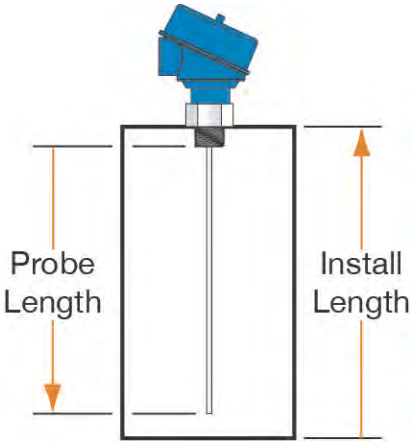

Tank with Dome Top & Flat Bottom

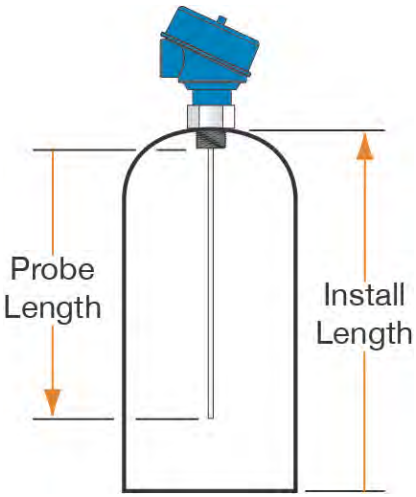

Horizontal Tank

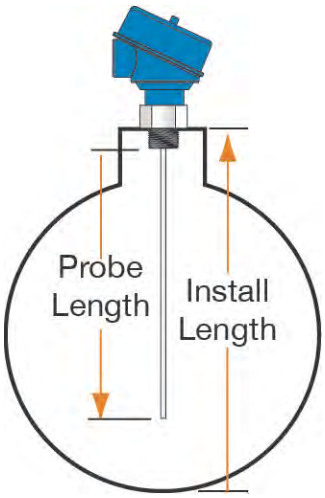

CONE AND ROUNDED BOTTOM TANKS

The location of an EchoWave® installed along the top of a dome or cone bottom tank may have an effect on the installation of the sensor. Be sure to measure from the actual point of installation. Round or cone bottom tanks will reduce the install height available, depending on install location. If this occurs, either the sensor can be raised using fittings (see Adding a Riser to Avoid Cutting the Probe) or the probe's length may be reduced by cutting the probe (see Cutting the Probe in Section 7).

Install Height > Probe Length

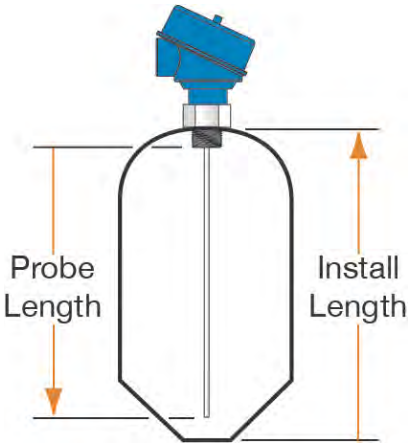

Install Height < Probe Length

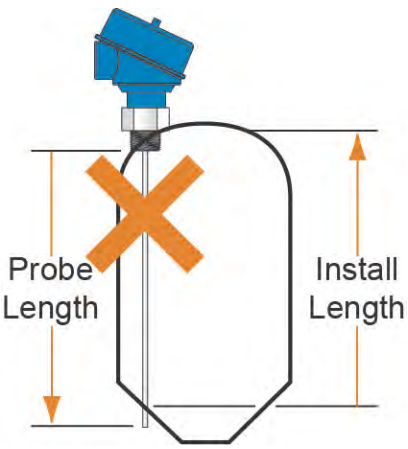

Install Height > Probe Length

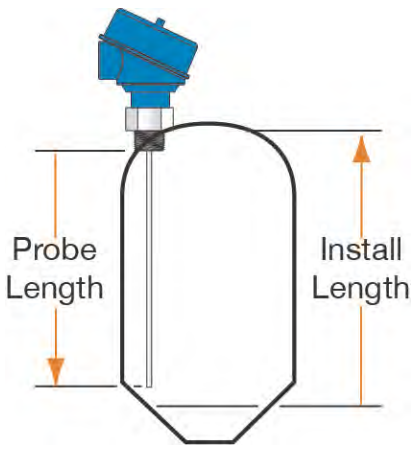

ADDING A RISER TO AVOID CUTTING THE PROBE

In some conditions, a riser may be added to avoid cutting the probe.

Rod and Cable Probes

With the Rod and Cable versions of the probe, the maximum height for the riser is 12” (300mm). The minimum diameter of the riser is 2” (50mm). The riser must be metallic in construction using the least number of fittings /connections. **Note:** An **Empty Signal Scan is a requirement** so that the EchoWave® can eliminate the odd geometry created by the riser.

Least Number of Fittings

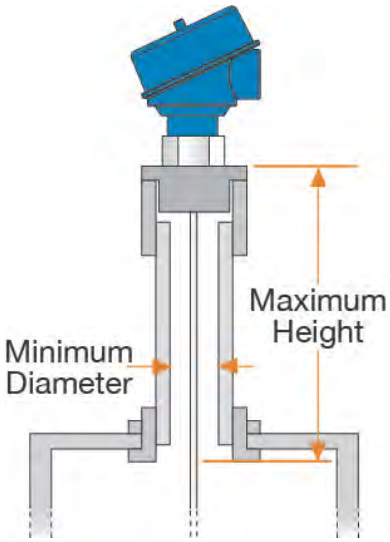

Too Many Fittings

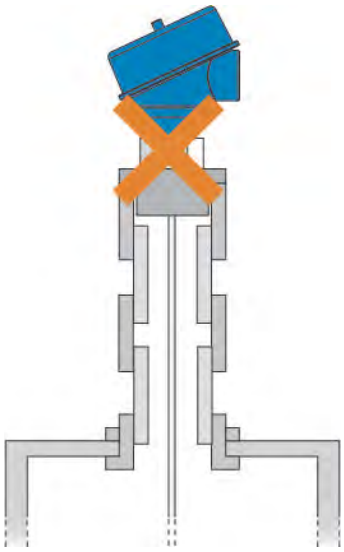

Coaxial Probes

With the coaxial probe, there is no maximum riser height or minimum riser diameter. This is because the coaxial shield isolates the physical changes to the installation from the sensor’s energy signal. In both examples, the energy signal cannot see any changes to the fitting/connections or from being installed in an extension that exceeds the maximum height for rod and cable probes.

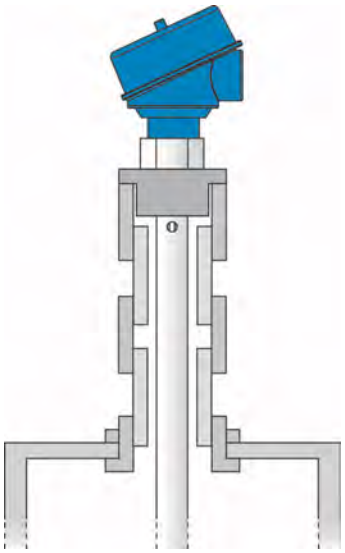

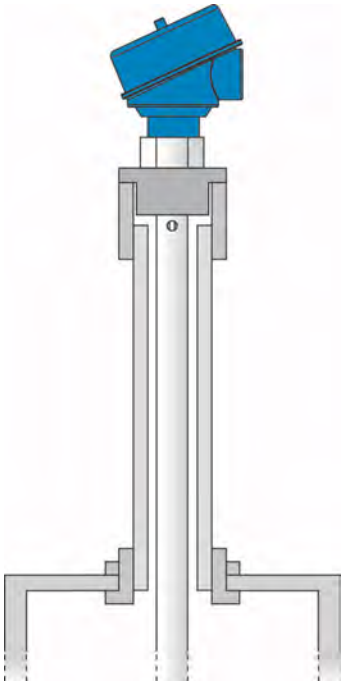

UNDERSTANDING MEASUREMENT RANGE

EchoWave® level transmitters have small dead band areas at both the top and bottom of the probe. It is due to the presence of unavoidable signal disturbances at both ends of the probe. In these dead band areas the measurements are non-linear or have reduced accuracy. Therefore, it is not recommended to actually measure level within these dead band areas. Their length depends on the probe type and the reflectivity (i.e. dielectric constant) of the liquid to be measured.



The **Measurement Range** of LG10/LG11 series extends between the top and bottom dead band areas; this is the area in which a sensor will have the specified measurement performance. It is recommended that the maximum and minimum levels to be measured in the tank are actually within the **Measurement Range** of the sensor. The span between the lower range value [4mA] and the upper range value [20mA] of the current output is proportionally equal from 0 to 100% of your continuous level measurement reading. It is recommended that the span between these two range values stays within the **Measurement Range**.

The [**Top Dead Band**], closest to the threads, is set to 4" (100mm). This is measured from the top of the threads down to the probe. This is consistent for all styles of probe. **Note:** the measurement location for the Top Dead Band is different to the measurement location for the probe length.

The [**Bottom Dead Band**], closest to the end of the probe, is set to 2" (50mm). This is measured from the end of the probe on rod and coaxial probes. For cable probes, it is measured from the top of the counter-weight. The counter-weight must be included with the dead band as the sensor's inactive area.

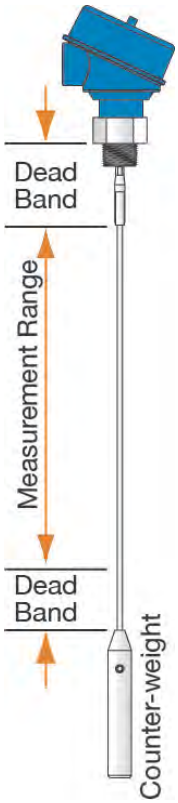

UNDERSTANDING MINIMUM FILL-HEIGHT (PUTTING IT ALL TOGETHER)

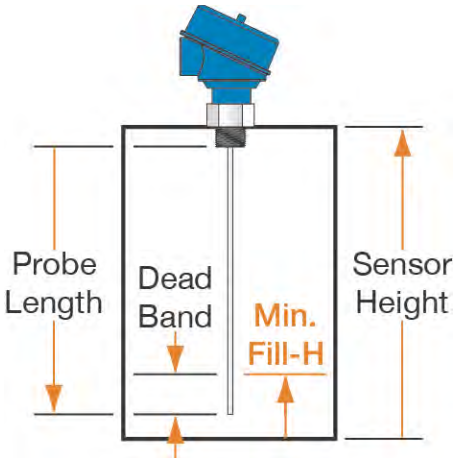

EchoWave® has a Minimum Fill-Height (Min. Fill-H), which is measured from the bottom of the tank to the top of the Bottom Dead Band. As shipped from the factory, Min. Fill-H is where the 4mA current is located and is the lowest point on the probe where the sensor can detect a liquid level. Any point below this position will stop at 4mA. The Min. Fill-H is influenced by the Sensor Height (SH), Probe Length (P), Height of the Threads [0.65" (16.5mm)] and Bottom Dead Band.

Min. Fill-H = (SH) – [0.65" (16.5mm)] – (P) + (Bottom Dead Band)

- With a cable probe, include the height of the counter-weight.
- Switch output to volumetric will allow Min. Fill-H to be set to (0).
- If the 4-20 mA output is reversed (20mA at bottom and 4mA at top), then the level will max out at 20 mA when the level falls below the Min. Fill-H.

Note: Because of the bottom dead band, the Minimum Fill-Height can never be at the end of the probe.

Note: The configuration of the sensor (Distance or Volume) will affect the current output at Minimum Fill-Height. Upon selecting Distance, the current will be set to 4mA at Min Fill-H. However, upon selecting volume, the current at Min Fill-H will be the calculated based upon 4mA being set at the bottom of the tank [see Distance (Height of Liquid) vs. Volume of Liquid].

Understanding Maximum Fill-Height

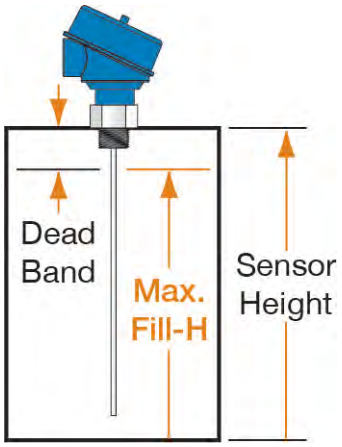

EchoWave® has a Maximum Fill-Height (Max. Fill-H), which is measured from the bottom of the tank to the Top Dead Band. As shipped from the factory, Max. Fill-H defines the 20mA current depicting the highest point on the probe where the sensor detects liquid level. Any point above this position will stop at 20mA. The Max. Fill-H is influenced by the Sensor Height (SH), Height of the Threads [0.65" (16.5mm)] and Top Dead Band.

Max. Fill-H = (SH) – [0.65" (16.5mm)] – (Top Dead Band)

- The Max. Fill-H may be decreased to lower the 20mA location, but it cannot be raised above its original setting.
- If the 4-20 mA output is reversed (20mA at bottom and 4mA at top), then the level will max out at 4 mA when the level rises above the Max. Fill-H.

Note: Because of the top dead band, the Maximum Fill-Height can never be at the bottom of the threads.

DISTANCE (HEIGHT OF LIQUID) VS. VOLUME OF LIQUID

With WebCal®, the LG10/LG11 series can be configured to operate as a device that reads the distance (height of liquid) or volume of a liquid. The location of the empty current will adjust depending on which configuration method is selected.

Note: The empty (4mA) location is placed at a different location based upon selecting distance (liquid height) or liquid volume.

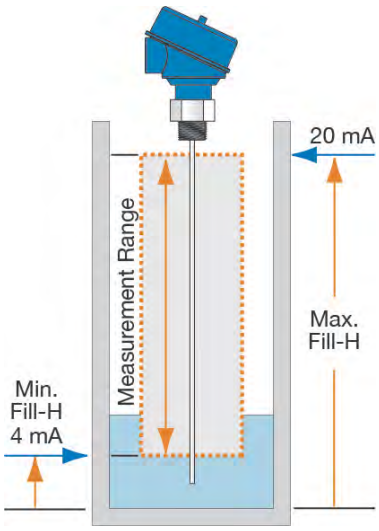

Distance (Height of Liquid): When the EchoWave® is configured to read the distance (height of the liquid), the default for the sensor Empty will be at the bottom of the measurement range (end of the probe minus the bottom dead band). This is where 4mA will be set. The default for sensor Full will be at the top of the measurement range (Top Dead Band), where 20mA will be set. The 20mA can be set by the Maximum Fill-Height.

Volume of Liquid: When the LG10 series is configured to read the volume of liquid, the output will track the volume of the tank as the level increases and decreases. Like Distance, the Empty and Full settings will default to the low and high end of the Measurement Range. The location of the 20 mA can be adjusted with the Maximum Fill-Height settings. However, the shape of the tank can influence the current output, depending upon the tank being linear or non-linear (see below).

Linear Tank Example

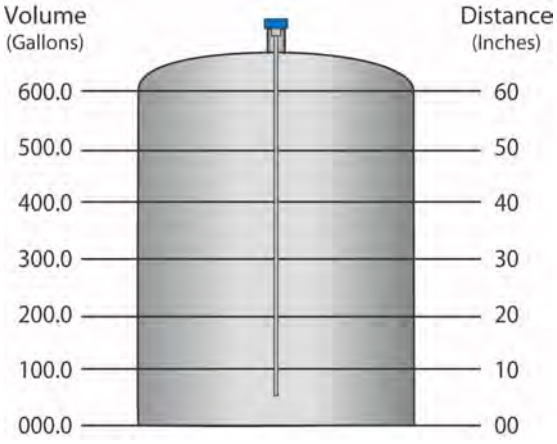

Note: In the above illustration, 10” of liquid will always be equal to 100 gallons of liquid (1” = 10 gallons).

Non-Linear Tank Example

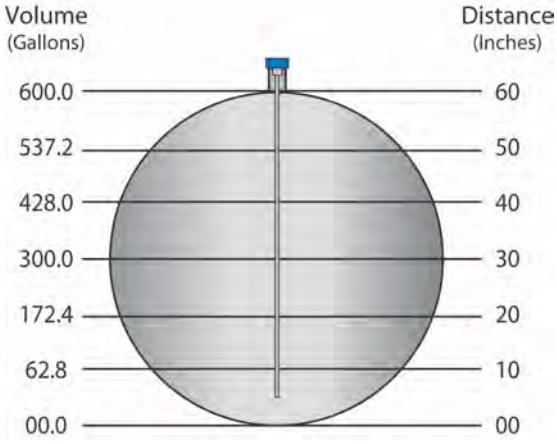

Note: In the above illustration, 1” of liquid does not equal 10 gallons. The 10” at the bottom represents a rise of 62.8 gallons. As a change between 10” and 20” represents an increase of 109.6 gallons (i.e. 172.4 gallons – 62.8 gallons).

EchoWave® is mounted vertically into the tank via its connection thread. It is then screwed directly into a standard threaded tank connection, i.e. tank adapter, bushing, weld-in socket, or it can be screwed into a flange which is connected to a tank nozzle.

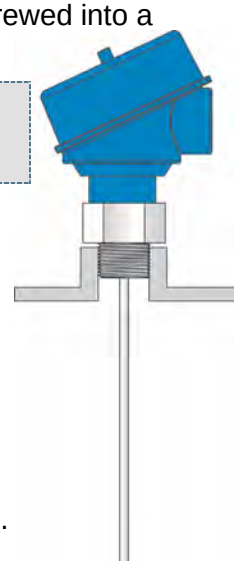

Always use metal fittings with the Rod Probe (LG10-0 series) and Cable Probe (LG11-2 series. The Coaxial Probe (LG10-1 series) can use any type of fitting material.

LG10/LG11 series should not be welded directly into the tank. Neither should flanges be welded onto the sensor. Welding on the metal parts of EchoWave® will cause serious damage to the transmitter.

Do not lift or handle the EchoWave® by its probe: This will cause excessive stress on the probe connection. EchoWave® should be handled by the hexagon or the lower section of the housing. Do not screw in the sensor by its housing. It should be tightened only via its hexagon (wrench size 32mm).

The end user has to ensure proper sealing of the sensor connection; based upon process conditions, i.e. temperature, pressure and resistance against the process liquid's atmosphere.

For NPT thread connections, pressure-tight joints require a sealant directly on the threads.

In the case that the LG10/LG11 series is delivered with a detached probe (cable version only), attach the probe onto the small threaded stud below the hexagon. Make sure to avoid cross threading or misaligning the threads.

MOUNTING CONSIDERATIONS

The probes should be installed so that they are not directly impacted by liquids flowing out of the filling inlet. They should neither touch nor sway towards other objects inside the tank or the tank/nozzle walls; e.g. by agitator or mixer swirls. In applications with very strong fluid movements which can also cause excessive lateral force on the probe, it is recommended to anchor the probe. The anchoring fixtures are end user supplied.

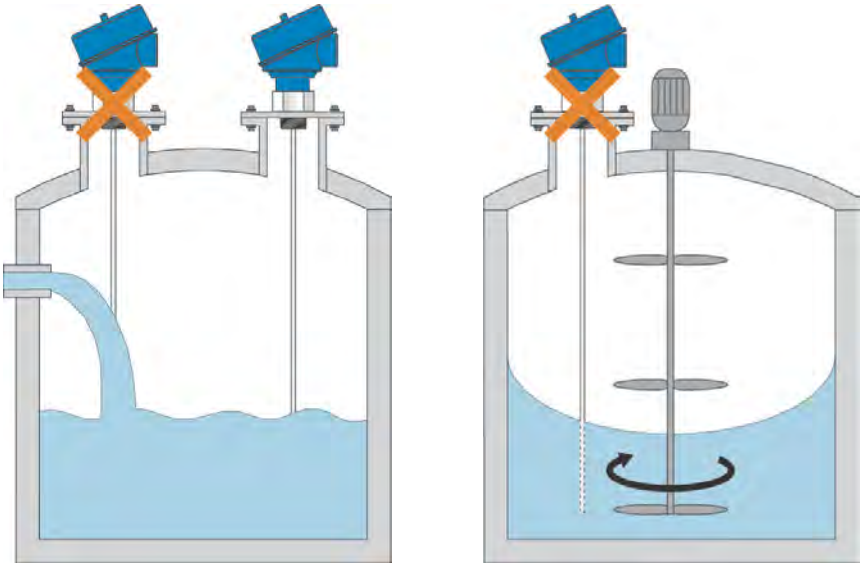

MOUNTING CONSIDERATIONS (CONTINUED)

The rod and cable probes are suitable for a very wide range of applications in liquids. However, the signal has a wider detection radius around the rod/cable. Therefore, it is more responsive for measurement signal disturbances that are overcome by a few Mounting Considerations (see below) as well as simple configuration adjustments to the sensor. In most cases it is enough to activate and utilize the powerful LG10/LG11 series empty signal scan feature. It works most efficiently on stationary interference targets like tall and narrow nozzles or close-by objects.

In case a non-stationary interference target is close to the rod probe, like slowly rotating agitator blades causing problems with the measurement, it is recommended to use the coaxial probe. In any case, the rod and cable probes should never get in direct contact with the tank/nozzle wall or other objects in the tank.

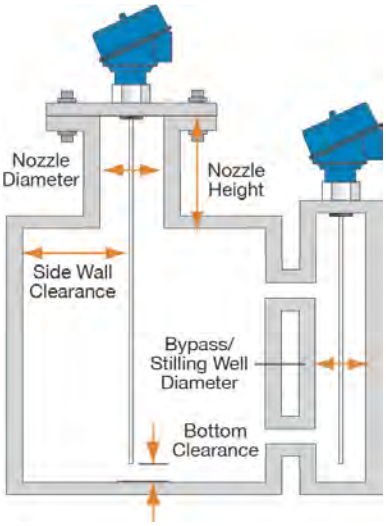

	Rod	Cable	Coaxial
Nozzle diameter	>2” (50mm)	>2” (50mm)	+(1)
Nozzle height	<12” (300mm)	<12” (300mm)	+
Clearance to tank wall or other internal objects	>4” (100mm)	>4” (100mm)	+
Clearance between probe end and tank bottom	>0.1” (2mm)	>0.1” (2mm)	+
Diameter of bypass chamber / stilling well	>1” (25mm)	>1” (25mm)	+(2)
Metallic tank or below grade concrete basin	+	+	+
Non-metallic or plastic tank	NR	NR	+

\+ = Recommended

+(1) = Enough diameter to fit in the coaxial tube (0.677” / 17.2mm)

+(2) = Enough diameter to fit in the coaxial tube (0.677” / 17.2mm) with allocated room around the probe for liquid flow through the bypass chamber / stilling well

NR = Not Recommended

The rod probe is also the recommended probe type for mounting the LG10 series into bypass chambers or stilling wells. In this case, plastic centering spacers are needed to prevent the probe from contacting the wall.

The cable probe is recommended for installations in tall tanks where limited installation headroom is available. Its performance characteristics and mounting considerations are similar to the rod probe.

The coaxial probe does not have restrictions regarding mounting position, tank connection, proximity to the tank wall and other objects inside the tank. The coaxial probe is recommended for installing LG10 series into a non-metallic tank or open pit.

INSTALLATION TIPS

Tall and Narrow Risers

Rod and Cable probes can be installed in tall and narrow risers under the following criteria:

- Nozzle Diameter must be >2” (50mm),
- Nozzle Height must be <12” (300mm),
- Riser must be metallic,
- An empty signal scan is required after installation.

Coaxial probes are not affected by tall and narrow risers.

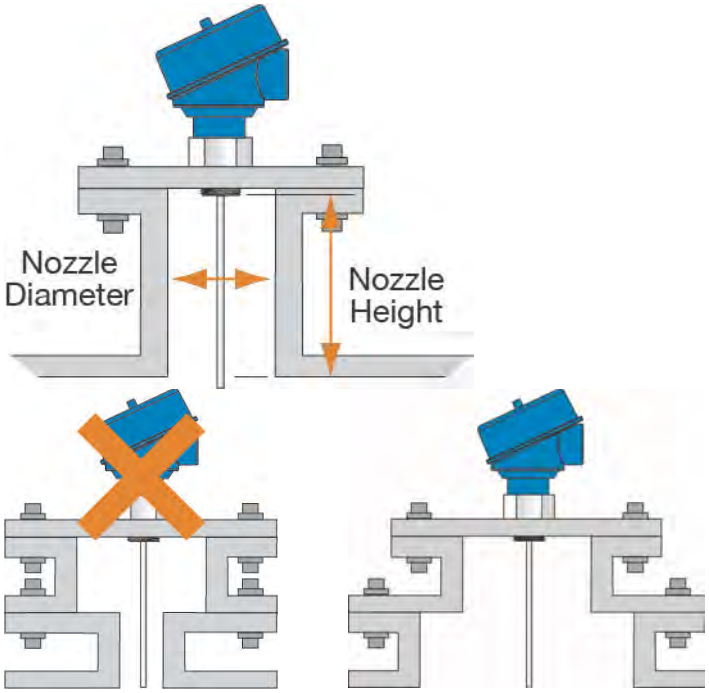

Difficult Tank or Riser Geometries

Rod and Cable probes must follow the criteria below:

- Tall and Narrow Risers criteria must be followed,
- Nozzle diameter remains the same diameter,
- Nozzle Diameter does not decrease,
- Nozzle Diameter may get larger, but an empty signal scan is required.

Coaxial probes are not affected by the shape of the tank or the geometry of the nozzle as the above is not applicable.

Close to Side Wall or Internal Obstructions

Rod and Cable probes must follow the criteria below:

- >4” (100mm) from the side wall,
- >4” (100mm) from any objects or obstructions within the tank,
- An empty signal scan may be required after installation.

Coaxial probes are not affected by the distance from the side wall or from other objects / obstructions within the tank.

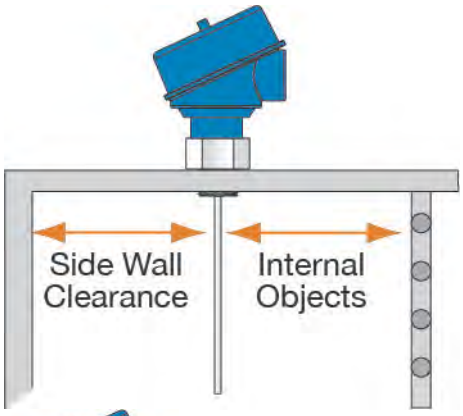

Moving Probe

Rod and Cable probes must follow the criteria below:

- Avoid applications where the movement of the tank will cause the probe to swing or touch objects and obstructions in the tank or the side wall of the tank.
- Avoid applications where the tank is truck/vehicle mounted.

Coaxial probes are not affected by the movement of liquid within a stationary tank.



INSTALLATION TIPS (CONTINUED)

Liquid Spray

Rod and Cable probes must avoid any liquid that sprays or pours onto the probe.

Coaxial probes are not affected by liquid straying on parts that are above the liquid surface. However, avoid installing probe where liquid will pour onto the probe.

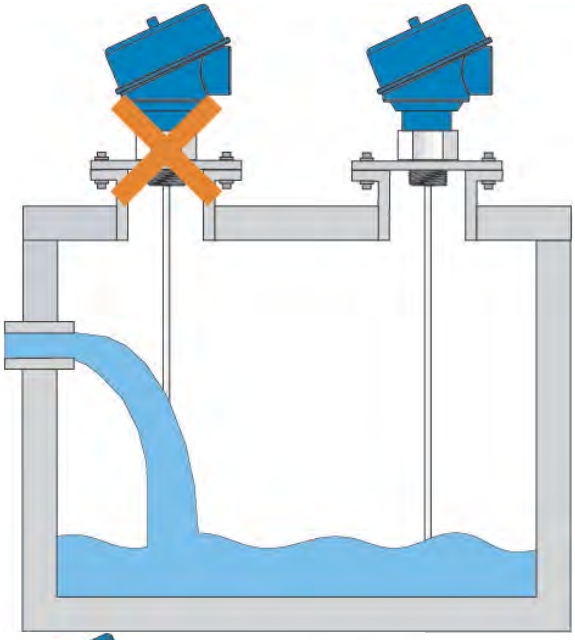

Non-Stationary Documents

Rod and Cable probes follow the criteria below:

- >4” (100mm) from any objects or obstructions within the tank,
- An empty signal scan may be required after installation,
- Non-stationary objects must not be moving when empty signal scan is preformed.

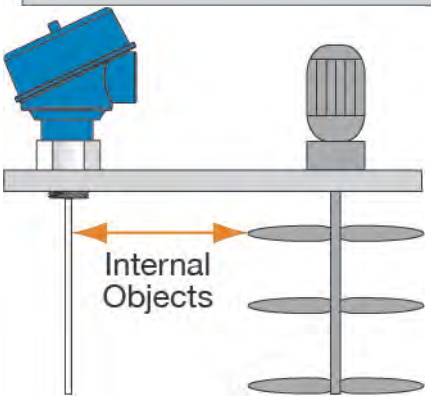

Coaxial probes are not affected by the movement of non-stationary objects, such as mixer blades or pump lifting chains.

Note: All probes (rod, cable and coaxial) can be affected by any liquid vortex created by a mixer.

Measurement Readings at the Very Top or Bottom of Tank

Rod and Cable probes do not have the outer tube and must adhere to all mounting requirements, specifically:

- >4” (100mm) from any objects or obstructions within the tank, including the bottom of the tank,
- Criteria for difficult tank or riser geometries must be followed.

Coaxial probes can easily be mechanically mounted to ensure the measurement of liquid up to a full or empty tank. Because the coaxial is encased within the outer tube, the sensor is self-contained so other objects or obstructions are not an issue. This makes raising or lowering the sensor simple and straight forth.

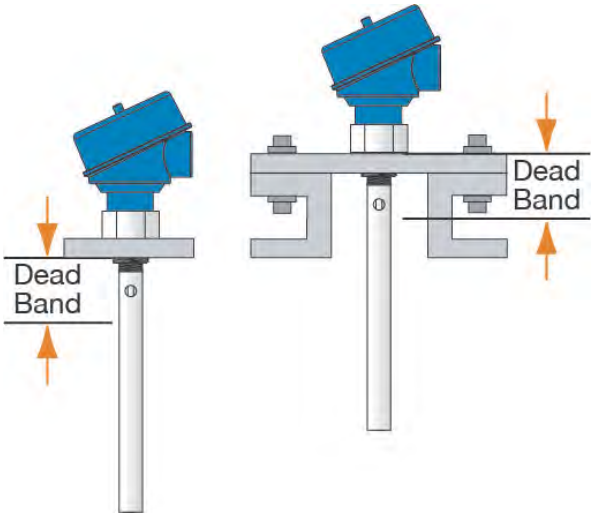

INSTALLATION TIPS (CONTINUED)

Non-Metallic Tanks

Unlike coaxial, rod and cable probes have no containment mechanism. This energy must be contained by the tank wall, requiring that **all rod and cable probe sensors be installed in metallic tanks or within below grade concrete sumps**.

Coaxial probes can be installed in any type of tank, including non-metallic tanks. This is because the outer tube acts as an insulator preventing the sensor's energy emanating beyond the probe.

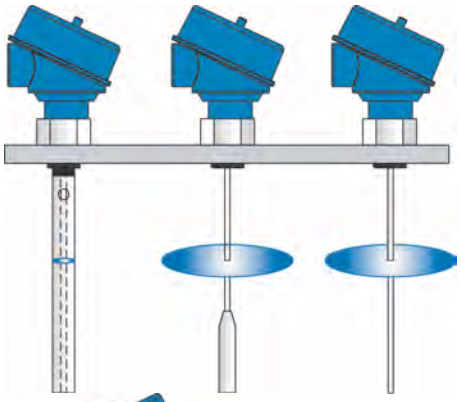

Stilling Wells / Bypass Chambers

Installations within a stilling well or a bypass chamber are recommended with a rod probe. A metallic pipe is required. A coaxial probe can be used in a stilling well or bypass chamber if required. **Note:** Never use a cable probe within a stilling well or bypass chamber.

- Make sure that the probe does not come into contact with the inner wall of the stilling well or bypass chamber
  - Non-metallic spacers may be required to keep the probe within the center of the stilling well or bypass chamber
- Make sure the liquid is able to freely fill, empty and that no residue remains within the stilling well or bypass chamber.
- All other mounting criteria must be observed

An Empty Signal Scan may be required after installation

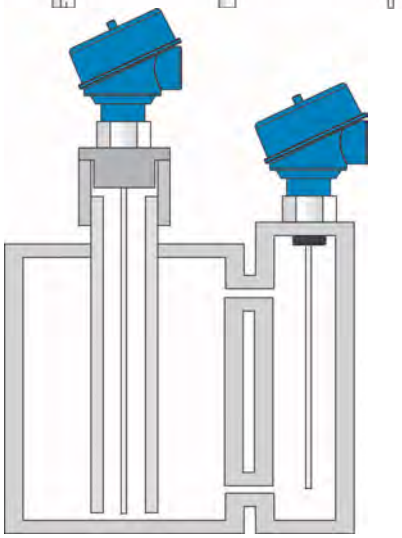

Limited Headroom

When installing in a tank where there is limited space above the top of the tank, the cable probe is the recommended solution. The cable probe design allows for the probe to be installed through a small space above the tank.

The rod and coaxial probes may be installed as long as the probes are not damaged or bent and as long as the sensor is not held by the probe (sensor must be held by the head).

- All other mounting criteria must be observed.

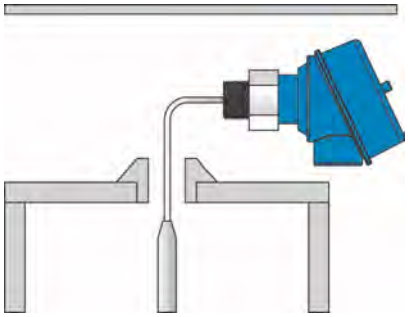

INSTALLATION TIPS (CONTINUED)

Tall Tanks

The rod and coaxial probes have a maximum insertion length of 9.8’ (3m). For metal or concrete tanks that are taller/deeper, the cable probe can be used for lengths up to 18.0’ (5.5m).

- The maximum length is based from the bottom of the threads.
    - **Note:** the coaxial probe consists of a rod probe with a metal outer tube installed around the original rod. The bottom of the mounting threads are used as the reference point for measurement.

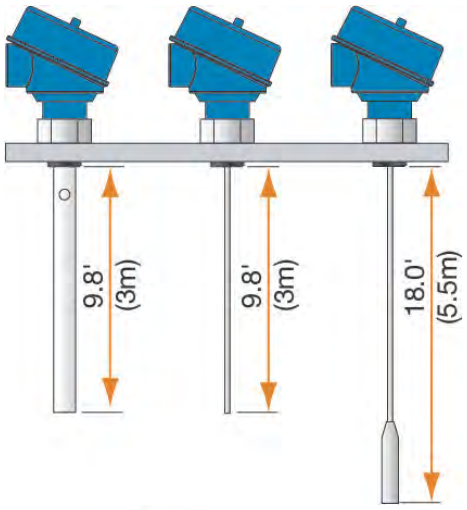

Side Mount Bracket (LM50 Series)

Rod and Cable probes can be installed with the side mount bracket under the following criteria:

- The side wall or any object / obstructions do not come within 4” (100mm) from the probe
- Any movement of the liquid will not cause the probe to swing into the side wall or any object / obstruction
- The tank must be metallic or a below grade concrete basin
- An empty signal scan may be required after installation
- A metal plate of 6” in diameter may be required if there is no roof to the tank/basin

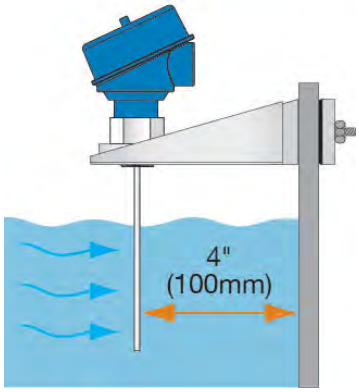

Coaxial probes are not affected by the side mount bracket.

Probe Too Long

For information on cutting the probe, see Cutting the Probe within the Appendix, Section 7.

Analog Output (4-20 mA): The analog output of the EchoWave® is a sourced 4-20 mA control circuit. The typical way to use this feature is to connect a positive supply to the (+) input terminal, a negative supply to the (-) input terminal and to connect the current output out of the 4-20 (+) terminal. The device that accepts the 4-20 mA current signal must reference the same negative supply listed above (see diagram below).

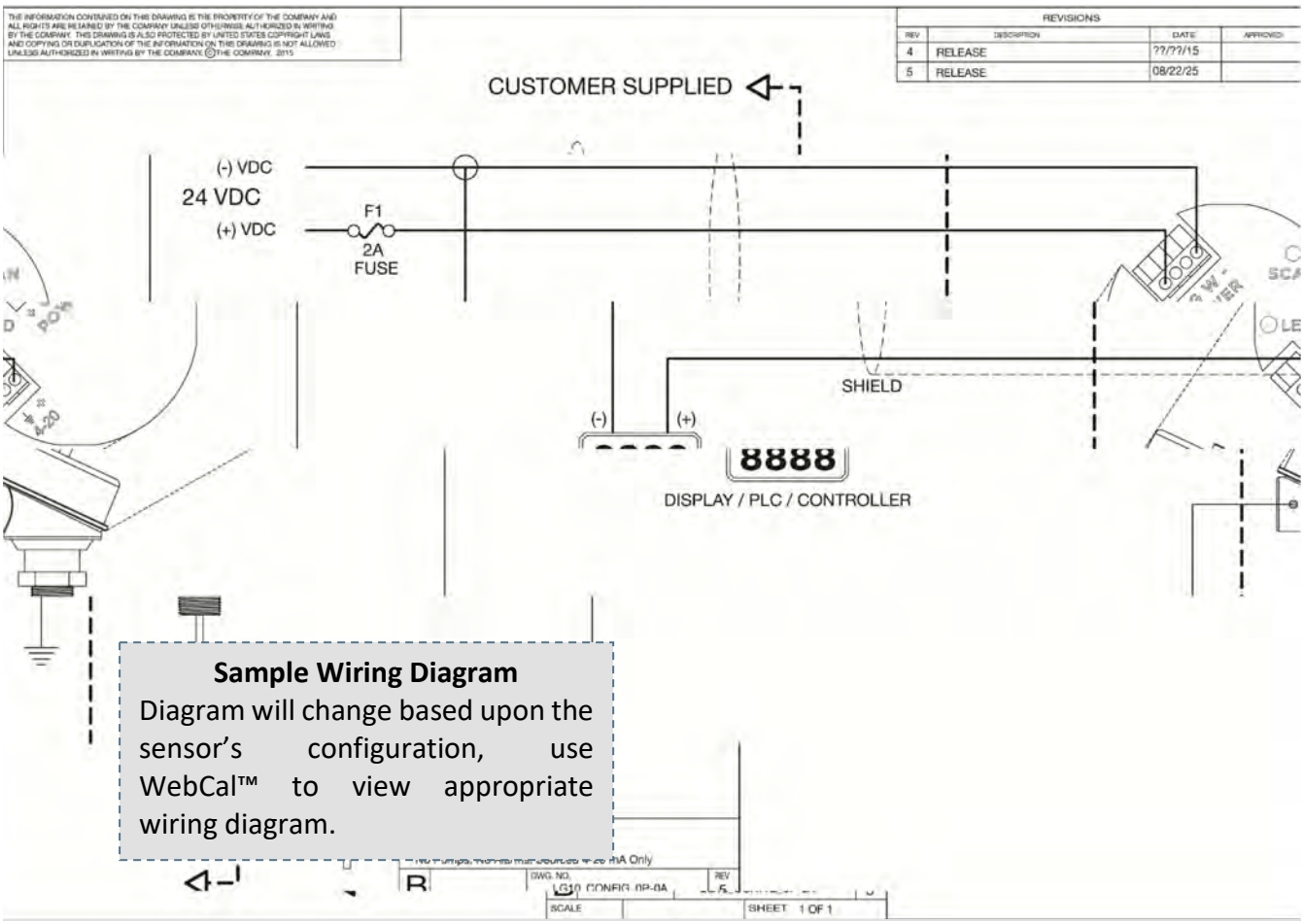

The cabling should be shielded and twisted to minimize EMI interference. Its shield should be connected at either end and **never connected at both ends**. Typically 18 to 24 gauge wire is used in this application.

GENERAL NOTES FOR ELECTRICAL CONNECTIONS, USAGE AND SAFETY

- Where personal safety or significant property damage can occur due to a spill, the installation must have a redundant backup safety system installed.
- Wiring should always be completed by a licensed electrician.
- Protect the sensor from excessive electrical spikes by isolating the power, whenever possible.
- Supply voltage should never exceed 30 VDC.
- Make sure that the power supply does not have a current more than 2A or that there is 2A rated fuse in the electrical circuit that energizes the device.
- The sensor materials must be chemically compatible with the liquids to be measured.
- Design a fail-safe system for possible sensor and/or power failure.
- **Never use the sensor in environments classified as hazardous.**

WIRE CONNECTIONS

The housing has single cable entry and can be attached to screw plugs, cord grips or conduit with the ½" NPT thread. **Note:** the customer must confirm the suitability of those connectors for the specific application requirements and cabling; and replace them when necessary. IP66-rated screw plugs and cord grips have to be properly mounted and tightened around cable of suitable type and diameter to ensure the IP66 rating of the housing.

Note: A liquid-tight cord grip and ferrite bead are included with the sensor (see Specification Section for cord grip data).

Note: Always include the ferrite bed when using the cord grip or when using non-metallic conduit.

Ferrite Bead **Liquid-Tight Cord grip**

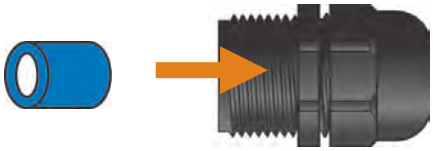

Note: Always shield the signal wire per instructions on the wiring diagram.

Conduit Connection

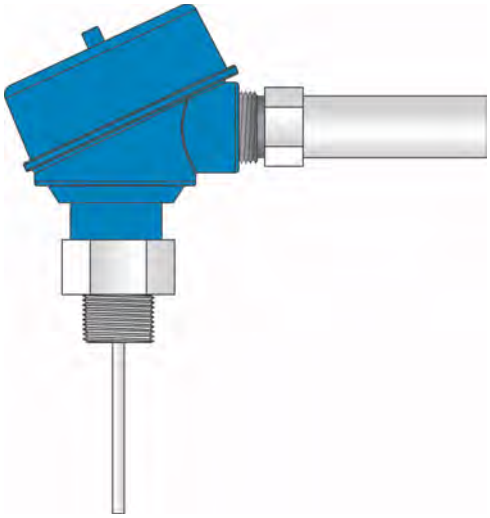

Cord Grip (Liquid Tight)

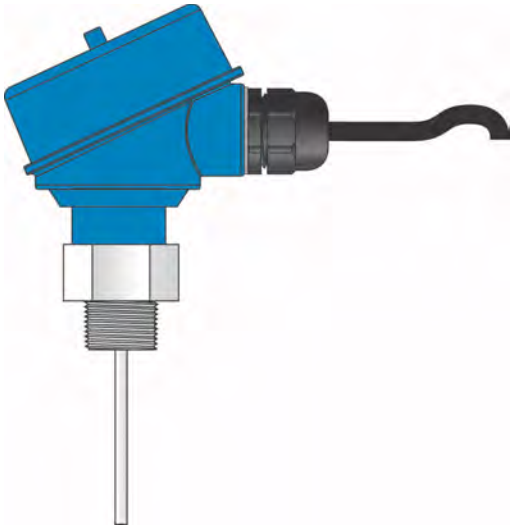

Avoid Condensation in the Conduit

You can give your instrument additional protection against moisture penetration by leading the conduit connection or cable downward in front of the cable entry. Condensation in the conduit will thus not enter the sensor enclosure.



COMMON WIRING TO DISPLAY, CONTROLLERS & PLC'S

Below is a quick review of wiring the EchoWave® to common display, controllers and PLC's.

DataView™ LI55 Series
Level Controller

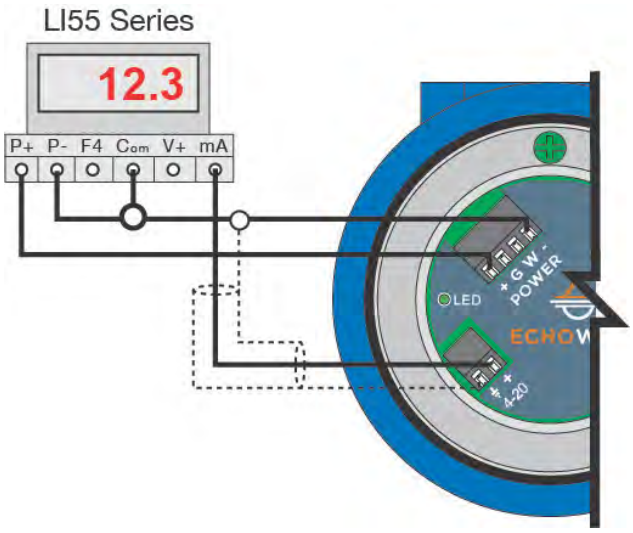

Commander™ LI90 Series
Multi-Tank Level Controller

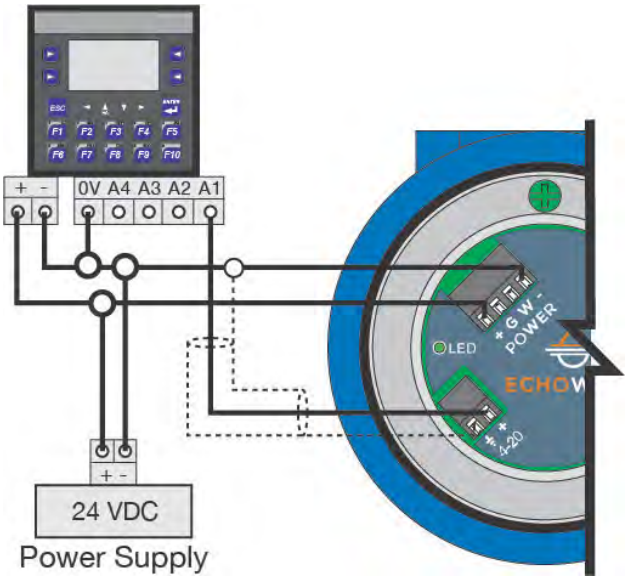

DataLoop™ LI23 Series
Level Indicator Without Backlight

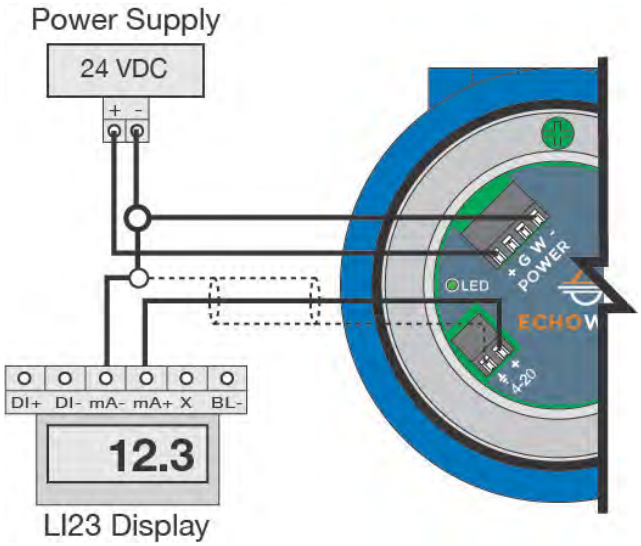

DataLoop™ LI23 Series
Level Indicator with Backlight

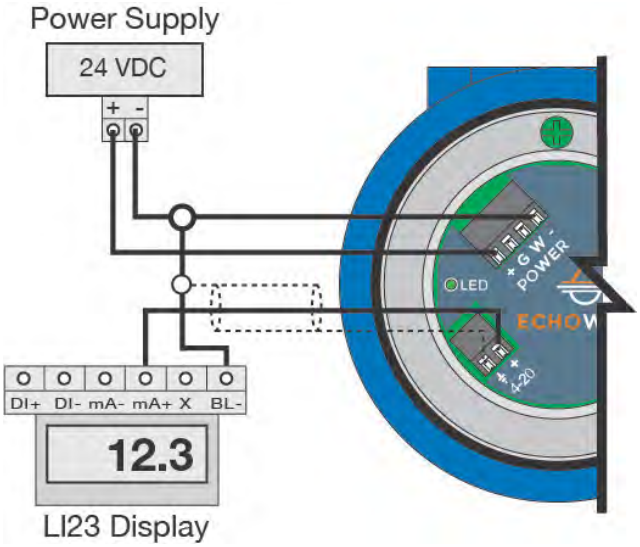

Note: 4-20 mA signal wire requires shielding (power supply wires may use the same shielding as the signal wire). Shield wire can be connected at either end. **Never** connect shield wire at **both ends**. EchoWave is a 3-wire transmitter and should never be wired as a 2-wire loop device.

COMMON WIRING TO DISPLAY, CONTROLLERS & PLC'S (CONTINUED)

Below is a quick review of wiring the EchoWave® to common display, controllers and PLC's.

Generic Loop Powered Display

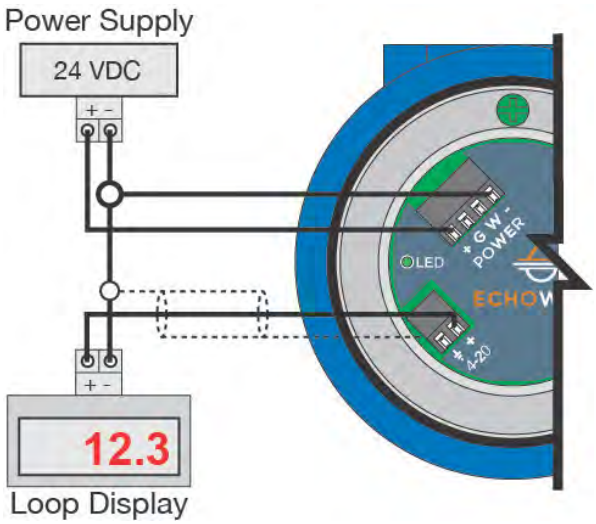

Generic PLC

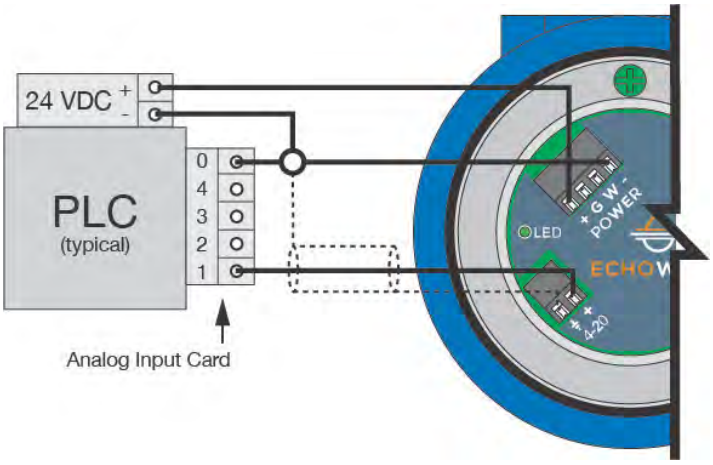

DataPoint™ LC52 Series Level Controller (JWB mode)

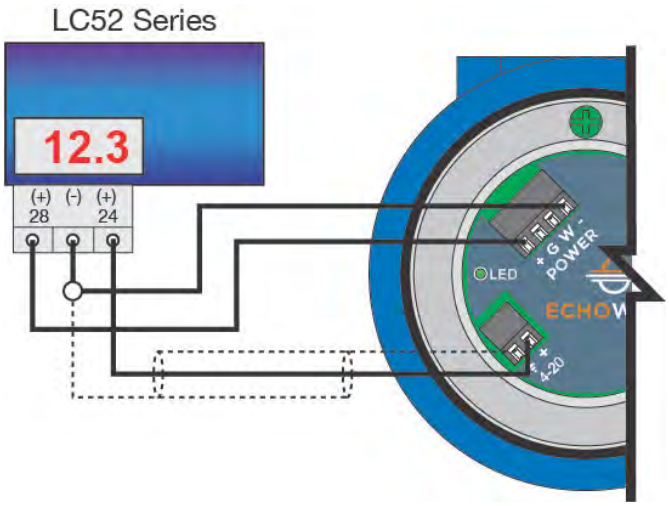

Note: LC52 shipped from factory with jumper in JWA mode. Jumper must be switched to JWB mode for operation with the EchoWave®.

Note: 4-20 mA signal wire requires shielding (power supply wires may use the same shielding as the signal wire). Shield wire can be connected at either end. **Never** connect shield wire at **both ends**. EchoWave is a 3-wire transmitter and should never be wired as a 2-wire loop device.

EchoWave® can be configured before installation or within the tank. The transmitter features non-volatile memory, so any setting configured before installation will not be lost when the sensor is powered down. To configure, follow the steps below:

1. Install WebCal® Software
   a. Go to www.flowline.com/webcal-software/ and select language version.
   b. Review how USB® Fob interfaces with EchoWave® and your computer.
2. Measure the Tank
   a. Begin by measuring the key tank and fitting dimensions.
   b. Correct tank dimensions will result in accurate sensor measurement.
3. Sensor Configuration
   a. Configures Loop Fail-Safe, Output at Empty, Startup Condition & Dielectric Range for the sensor.
4. Dimensional Entry
   a. Distance Mode (default).
      i. Basic information for operation including Sensor Height, Probe Length, Max. Fill-Height.
5. Tank Level Confirmation
   a. Confirm the values are accurate for the application.
6. Write to Unit
   a. Uploads configuration into the sensor.
   b. Access to a customer wiring diagram.

STEP 1 – INSTALL WEBCAL® SOFTWARE

EchoWave® is configured through WebCal®*, a PC software program. WebCal® is a free download from Flowline's website. ***You must download and install WebCal® (version 6.5 or greater) prior to plugging in the USB® Fob*.** Please go to flowline.com/webcal-software, and select your language version.

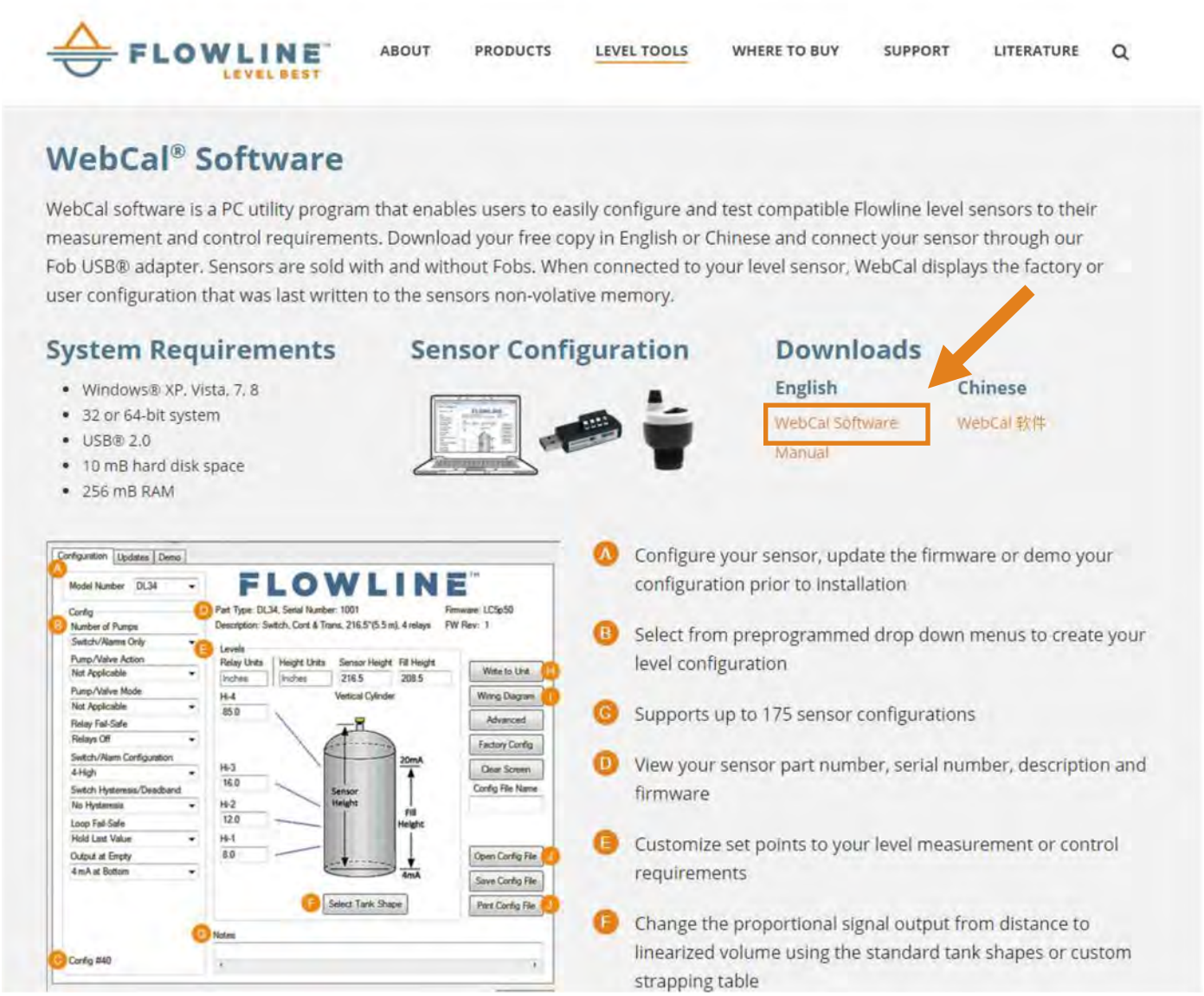

WEBCAL® SYSTEM REQUIREMENTS

Windows® XP, Vista, 7, 8, 10, 11
32 or 64-bit system
1 USB® 2.0 port
10 mB hard drive space
256 mB RAM
Internet connection

**** For complete information on the WebCal® software, please refer to the WebCal® manual located at flowline.com/webcal-software.***

USB® FOB INTERFACE

EchoWave® communicates with WebCal® (version 6.5 or greater) through a USB® interface called a Fob. Before plugging your Fob into your computer's USB® port, be sure that you have installed WebCal® (version 6.5 or greater) on your computer.

Connect the red, green, white and black terminals on the Fob to the corresponding terminals within the EchoWave®. Tighten the screws on the terminals and plug your Fob into the USB® port of your computer.

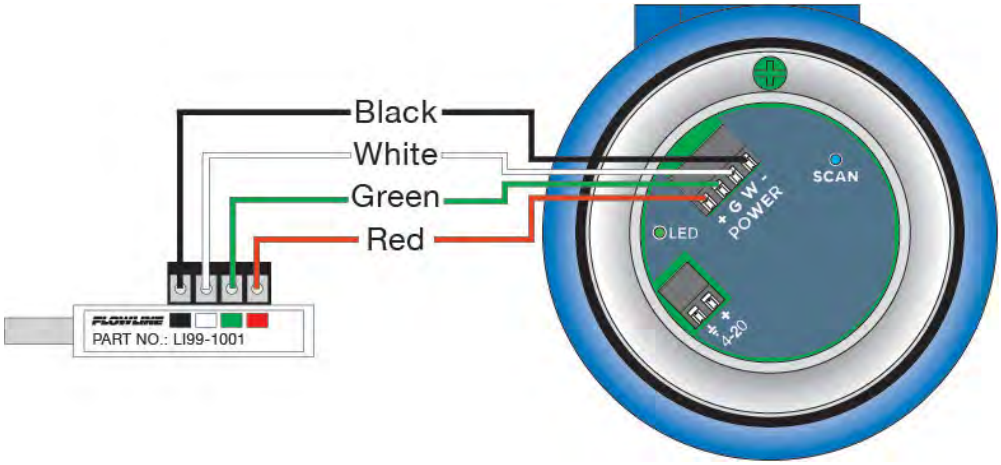

WIRING IS IDENTICAL FOR ALL SERIES OF ECHOWAVE®

- The **maximum cable distance** between the computer and EchoWave® is 15'. This only applies when configuring the EchoWave®.
- Once EchoWave® is configured and prior to installation, disconnect all wires from the center two terminals to prevent a short of the configuration circuit
- **Note:** When using the Fob, do not add VDC power. The Fob, when connected to the computer, will provide the required power to the EchoWave®.

* For complete information on the WebCal® (version 6.5 or greater) software, please refer to the WebCal® manual located at flowline.com/webcal-software.

STEP 2 - MEASURE THE TANK

Measuring the tank is one of the most important aspects in configuring the sensor. When measuring the tank, take into account the location of the sensor with respect to fittings, risers, dome tops and bottoms, and identify where the measurements are taken from the sensor. The Sensor Height is influenced by the installation location. Sensors mounted along the sloped portion of the tank will result in a lower (**HEIGHT**) value. On the other hand, sensors installed in risers/nozzles will result in a higher (**HEIGHT**) value.

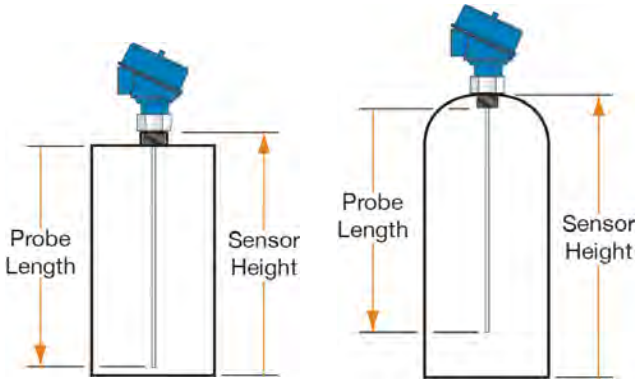

The basic measurements (**Sensor Height, Probe Length, Max. Fill-H and Man. Fill-H**) for configuration are described below:

1. **SENSOR HEIGHT** - Distance from the Top of Sensor's Threads (sensor's measurement location) to the bottom of the tank.
   a. The Sensor Height is typically set to the bottom of the tank.
   b. This setting determines the 4mA location.
2. **PROBE LENGTH** – Actual physical length of probe.
   a. The Probe Length is measured from the **bottom** of the threads to the end of the probe.
3. **MAX. FILL-H** - Distance from the bottom of the tank to the level of liquid where the tank is full.
   a. This setting determines the 20 mA location.
   b. The **MAX. FILL-H** is typically set to the liquid full level.
   c. 20mA cannot be set within the sensor's upper dead band [4" (10cm) from **top** of the threads].
   d. Largest **MAX. FILL-H** value will be as follows:

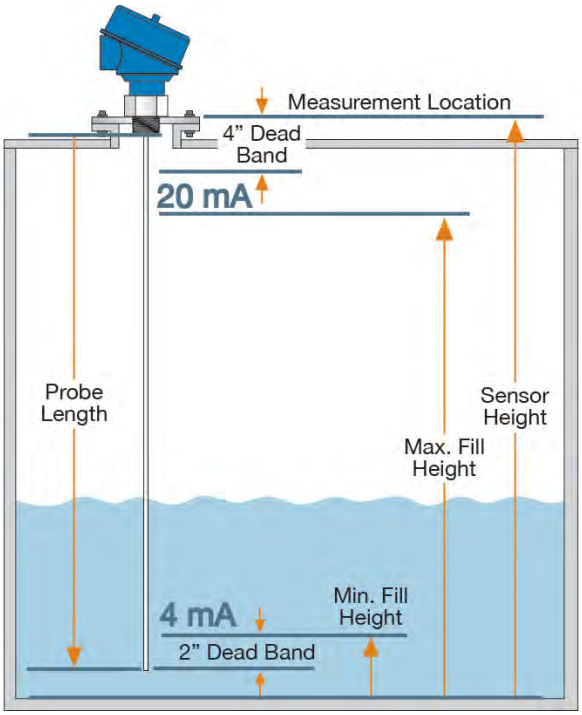

Largest **MAX. FILL-H** = **SENSOR HEIGHT** – 4" (10cm)

4. **MIN. FILL-H** - Distance from the bottom of the tank to the lowest portion of the probe when level can be detected.
   a. This setting determines the 4 mA location.
   b. The **MIN. FILL-H** is automatically calculated by WebCal®.
   c. 4mA cannot be set within the sensor's lower dead band [2" (5cm) from end of the probe].
   d. Smallest **MIN. FILL-H** value will be as follows:

Smallest **MIN. FILL-H** = **SENSOR HEIGHT** – Probe Length - 2" (5cm)

With EchoWave® connected to your computer, open the WebCal® software by clicking on the WebCal® icon. Follow steps 3 to 6 to configure the transmitter using WebCal®. Click “Help” in the lower right hand corner and open the help menu of WebCal® for more instructions on WebCal®. If you need additional assistance using WebCal®, please contact a Flowline® application engineer at (562) 598-3015. **Note:** For complete information on the WebCal® software, please refer to the WebCal® manual located at flowline.com/webcal-software**.**

STEP 3 – SENSOR CONFIGURATION

Configures the Loop Fail-Safe, Output at Empty, Startup Condition, Probe Type and Dielectric Range.

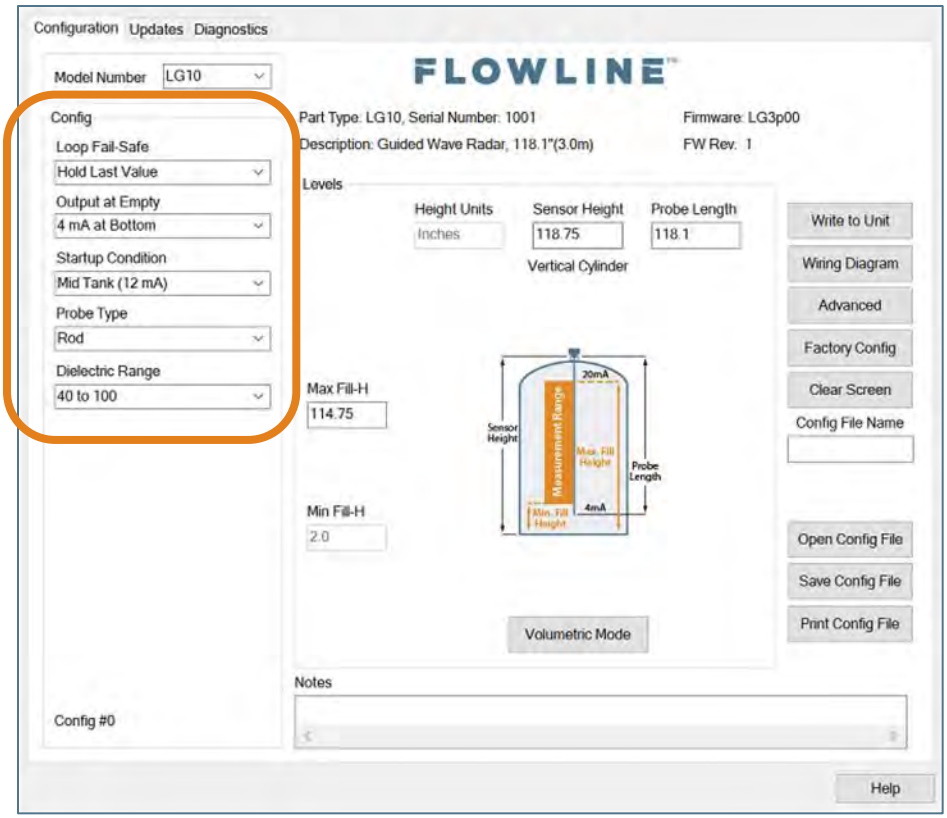

Out of Range

Flowline suggests setting the Loop Fail-safe to **HOLD Last Value** in application where the liquid level falls below the end of the probe or rises above the Max. Fill-H.

- If the level only falls below the end of the probe, then **EMPTY** can be used.
- If the level only rises above the Max. Fill-H, then **FULL** can be used.

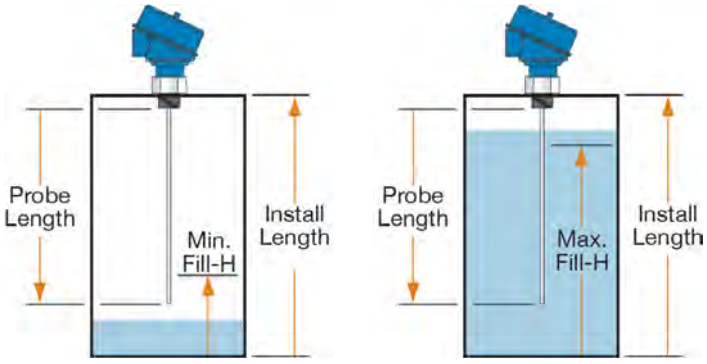

Note: Never allow the liquid to rise into the top dead band of the sensor (within 4” from the top of the threads.

STEP 4 – DIMENSIONAL ENTRY:

Distance Mode (default): Output of sensor is based on the distance (height of liquid) in the tank. Any change in liquid level will reflect linearly to the current output. ***Note:*** *Most applications will fall into this category*. For Volumetric outputs, refer to **VOLUMETRIC CONFIGURATION** on page ??. The three settings you must enter for Distance Mode are Sensor Height, Probe Length and Max Fill-H. All three settings can be entered on the main configuration screen.

Sensor Height: Sets the location of the sensor above the bottom of the tank. It is based on the distance from the Empty level position to the Top of the Threads of the sensor (see below).

Probe Length: Sets the physical length of the probe. It is based on the distance from the end of the probe to the bottom of the mounting threads.

Fill-Height: Sets the location for 20mA. It is based on the distance from the Empty level position to the Full level position (see below).

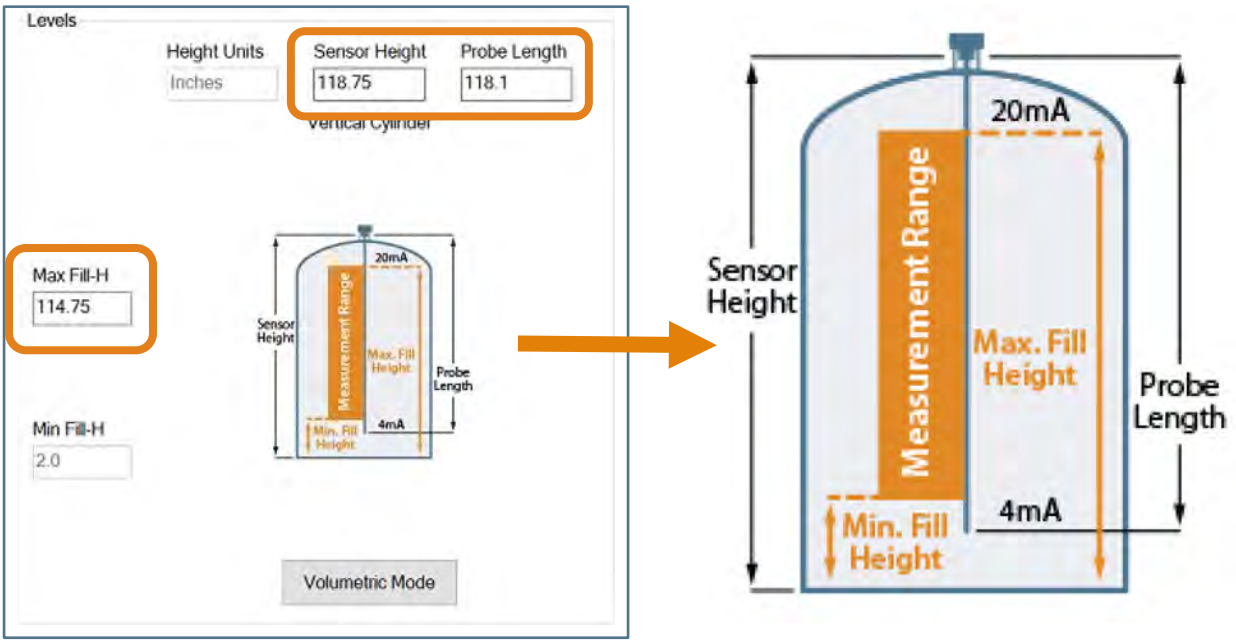

Note: In the Distance Mode, the 4mA location will always be 2” from the end of the probe. The Min-Fill-H value will always indicate the distance the 4mA location is above the bottom of the tank.

STEP 5 – TANK LEVEL CONFIRMATION:

Verify the Height Units, Sensor Height, Probe Length, Maximum Fill-Height & Minimum Fill-Height. All values were calculated in the previous Dimensional Entry window.

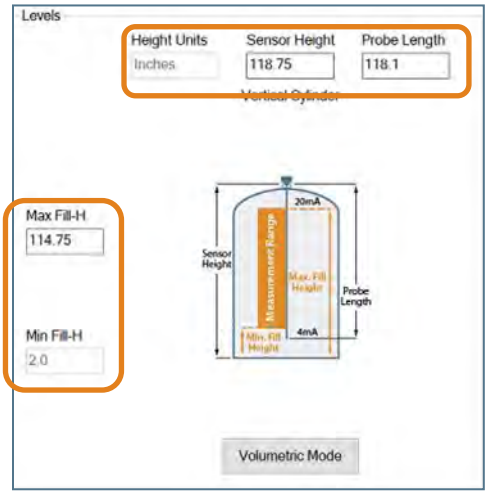

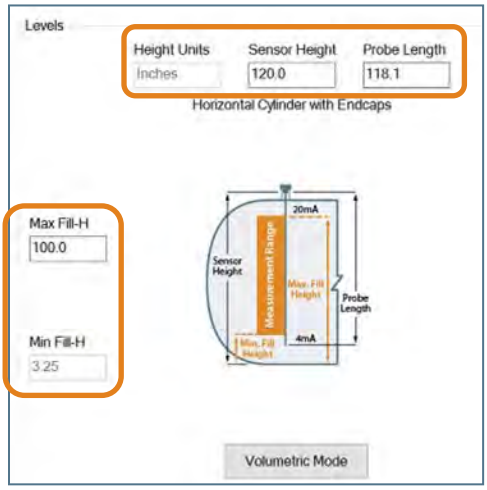

STEP 6 – WRITE TO UNIT:

This WebCal®* operation uploads configuration into the sensor. Other features in the section include providing a custom wiring diagram specific to the signal output and saving the configuration file to your hard drive.

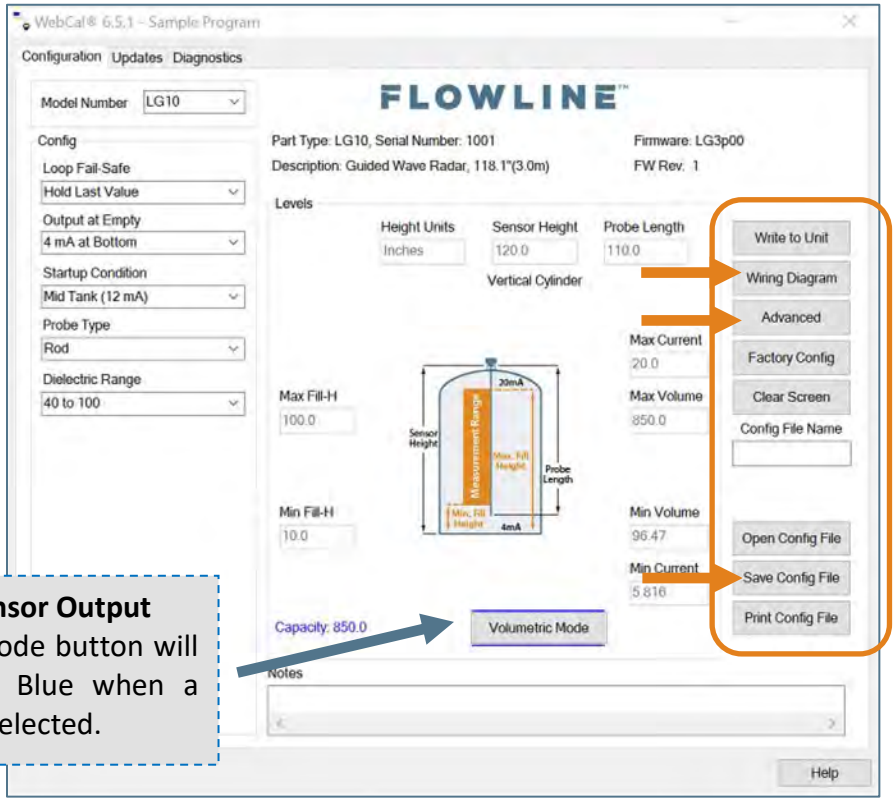

Volumetric Sensor Output
The Volumetric Mode button will be highlighted in Blue when a volume output is selected.

* For complete information on the WebCal® software, please refer to the WebCal® manual located at flowline.com/webcal-software.

EMPTY SIGNAL SCAN

The Empty Signal Scan is a powerful disturbance signal suppression feature of EchoWave®. The sensor scans its entire probe length for any disturbance/interference signals within the application that could potentially be misinterpreted as level readings by memorizing and suppressing them during operation. Therefore, the LG10/LG11 series only recognizes the actual level signals caused by the liquid being measured.

The Empty Signal Scan is intended for the rod & cable probe, since its signal has a wider detection radius around the probe making it more responsive for measurement signal disturbances. An Empty Signal Scan is typically not required for the coaxial probe.

The Empty Signal Scan works most efficiently on stationary interference targets like tall and narrow risers or close-by objects/obstructions. To enable an Empty Signal Scan, the EchoWave® has to be mounted in its final position. The tank has to be completely empty. This will ensure a reliable identification of the actual disturbance signals only. In case there are non-stationary interference targets close to the rod probe (slowly rotating agitator blades or streams of liquid filling into the tank), it is recommended to use the coaxial probe.

ACTIVATE EMPTY SIGNAL SCAN

When EchoWave® is shipped, this feature is deactivated. To initiate a Empty Signal Scan, use the following instructions:

1. Make sure the LG10/LG11 series is installed in its final installation position.
2. Make sure the liquid is at its lowest level (empty).
    a. Performing an Empty Signal Scan when the tank is not empty will create an incorrect scan. It can affect the sensors performance especially at liquid levels below the Empty Signal Scan tank level.
3. Press and hold the SCAN button for 6 seconds.
    a. The LED will begin to flash Orange indicating the empty signal scan has begun, release the button.
    b. Upon completion of the empty scan, a solid green LED will return
    c. If the empty scan is not successful. The LED will flash red

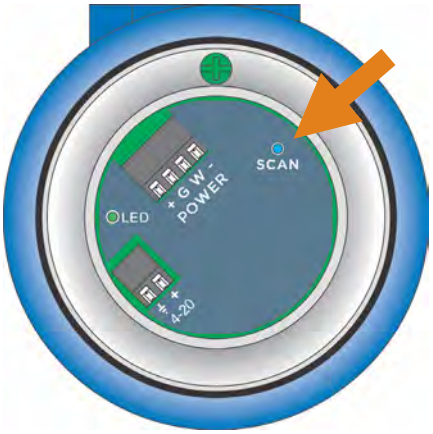

ERASE EMPTY SIGNAL SCAN

If there is a need to erase or turn off the Empty Signal Scan, perform the following: First remove power to the EchoWave®. Next, hold down the SCAN button while applying power to the sensor. When the LG10/LG11 series acquires a signal (LED will flash Green), the disturbance signal scan will be erased.

- No other setting or functions will be affected when this step is preformed.
- The Empty Signal Scan cannot be retrieved once erased.
- A new disturbance signal scan must be preformed for this function to operate again.

The Empty Signal Scan can also be erased using WebCal® software. Please refer to the instructions on the following page.

VIEWING THE EMPTY SIGNAL SCAN

The Empty Signal Scan can be viewed with the WebCal® software (version 6.5 and greater). ***Note:*** *Always consult a Flowline® representative for reviewing of the signal data. To view, follow the directions below:*

1. Activate an Empty Signal Scan (see instructions in Empty Signal Scan, Section 6).
2. Connect EchoWave® to WebCal® software via Fob
3. Click on Diagnostics Tab on the main WebCal® screen
4. In the Select Signal Data pull down, select Empty Signal Scan.
5. The Empty Signal Scan will be displayed in the window.

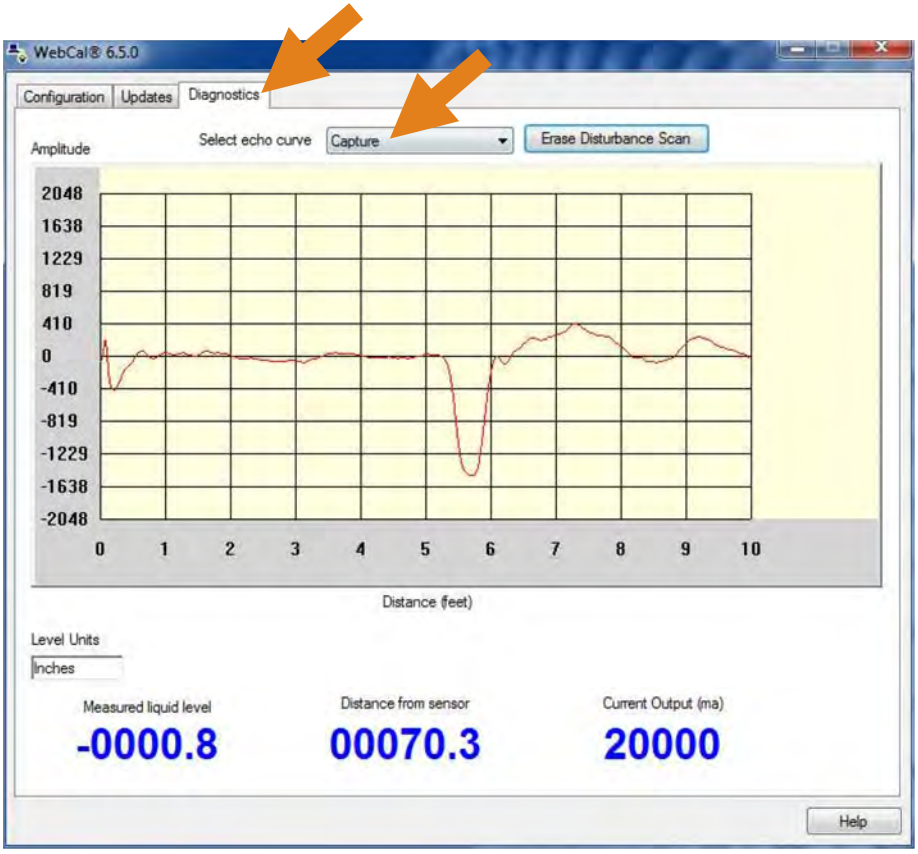

ERASE EMPTY SIGNAL SCAN WITH WEBCAL®

If there is a need to erase or turn off the empty signal scan, perform the following:

1. Disconnect the sensor from the application wiring.
2. Connect EchoWave® to WebCal® software via Fob.
3. Click on Diagnostics Tab on the main WebCal® screen.
4. Click on Erase Empty Signal Scan.

ECHO CURVE

This function displays the primary echo return(s) that the sensor is seeing graphically as well as the location and amplitude of the return(s). It can be used to confirm the correct level reading by the sensor or to troubleshoot any false signals. There is a two step process involving the creating and viewing of an Echo Curve. **Note:** Always consult a Flowline® representative for reviewing of the signal data.

#1 - CREATE AN ECHO CURVE

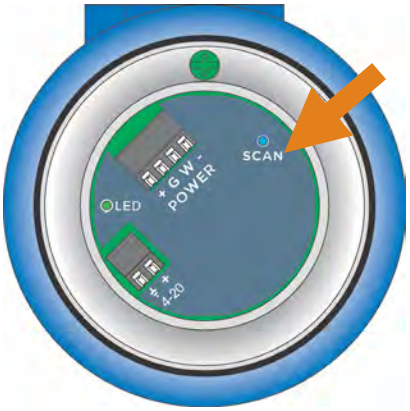

To create an Echo Curve, use the following instructions:

1. Make sure the LG10/LG11 series is installed within the actual application.
    a. Echo Curve will not provide any useful information when placed outside of the application.
2. Press and hold the SCAN button for 1 second (LED will turn off), then release.
3. Echo Curve is completed.
    a. To view, you must connect the sensor to WebCal®.

Note: LG10/LG11 series can store a single Empty Signal Scan and a single Echo Curve.

#2 - VIEWING THE ECHO CURVE

The Echo Curve can be viewed with the WebCal® software (version 6.5 and greater). To view, follow the directions below:

1. Create an Echo Curve (see instructions above).
2. Connect EchoWave® to WebCal® software via Fob
3. Click on Diagnostics Tab on the main WebCal® screen
4. In the Select Signal Data pull down, select Echo Curve.
5. The Echo Curve will be displayed in the window.

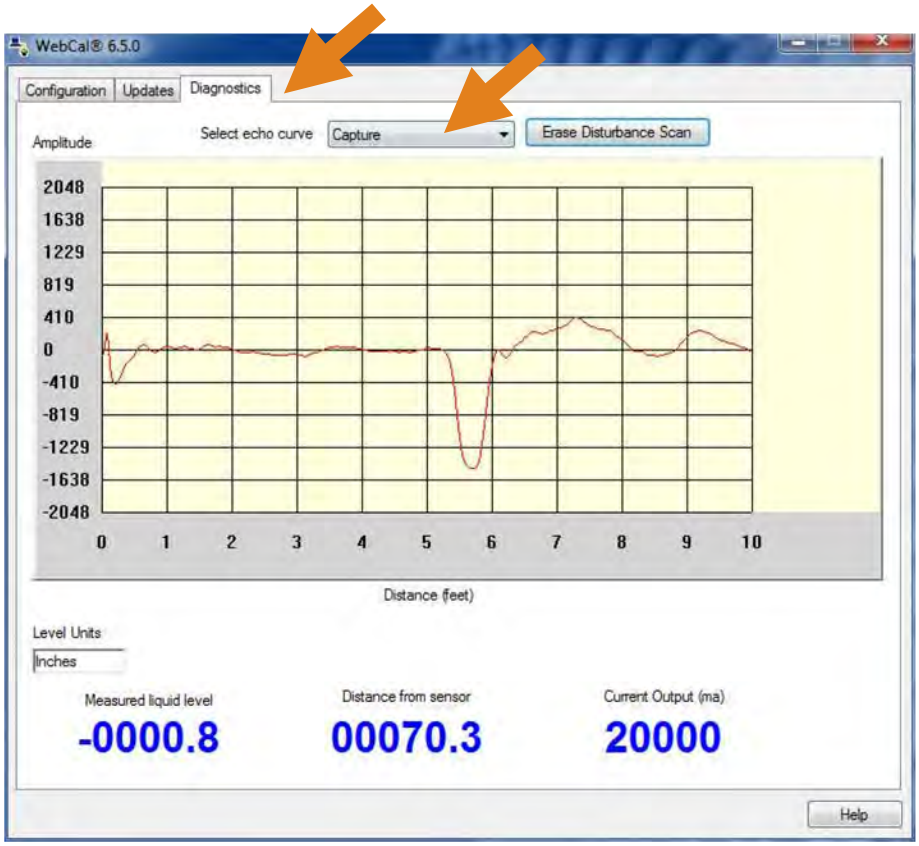

This section of WebCal® is where you select the sensor configuration settings. Start from the top and work to the bottom, choosing the sections that are applicable to your configuration. All configuration settings must be selected before you can Write to Unit.

SENSOR CONFIGURATION



LOOP FAIL-SAFE

This feature allows you to select the fail-safe current output if the sensor looses echo confidence (LOST). When the sensor regains echo confidence, the output current will revert back to the current level condition.

- **Hold Last Value -** The output will remain in the same state as the last validated echo detected. Example: If the output was 6.7mA just prior to the lost signal, the sensor will continue to output 6.7mA until echo confidence is regained.
- **Empty** - The output will revert to the current value for an empty condition. When **4 mA at Bottom** is selected, the sensor will output 4 mA during a fail-safe condition. If **20 mA at Bottom** is selected, the sensor will output 20 mA during a fail-safe condition.
- **Full** - The output will revert to the current value for a full condition. When **4 mA at Bottom** is selected, the sensor will output 20 mA during a fail-safe condition. If **20 mA at Bottom** is selected, the sensor will output 4 mA during a fail-safe condition.
- **Overfill (21mA)** - The sensor will output 21mA during a fail-safe condition.
- **Overfill (22mA)** - The sensor will output 22mA during a fail-safe condition.

Note: Right click on any item to open the help menu. To reset the configuration table, press the Clear Screen button.

Note: Choose Hold Last Value setting when your application level either falls below the end of the probe or rises above the Max. Fill-H setting. An alternative solution is to choose Empty setting if the level only falls below the end of the probe or choose Full if the level rises above the Max. Fill-H.

Falling Below Probe

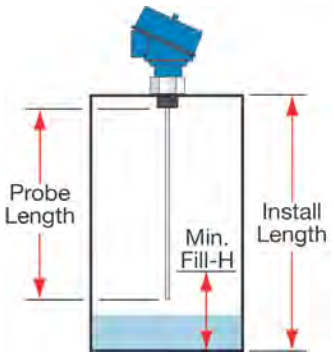

Choose Hold Last Value or Empty

Rising Above Max. Fill-H

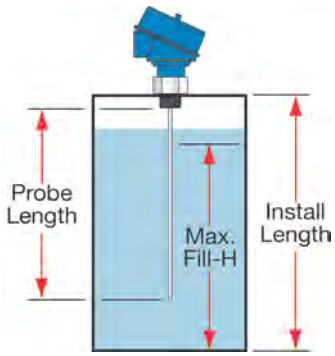

Choose Hold Last Value or Full

SENSOR CONFIGURATION (CONTINUED)

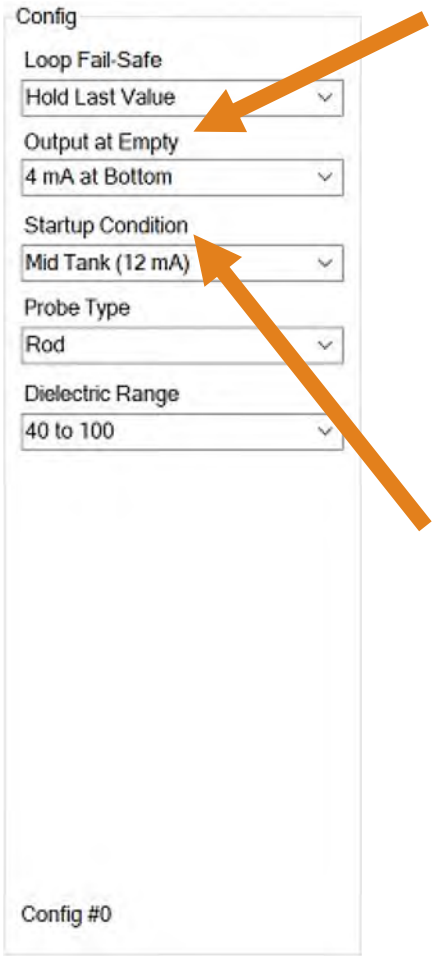

OUTPUT AT EMPTY

This feature allows you to select the orientation of the 4 to 20mA output (4 to 20 mA or 20 to 4 mA). Choose which output setting best fits the application. Factory default is 4mA at bottom and 20mA at top as this configuration scenario is an industry standard. When connecting your sensor to a display, you must account for your output orientation setting.

- **4mA at Bottom -** The output current will be 4mA when the sensor measures an empty tank and 20mA when the sensor measures a full tank.
- **20mA at Bottom** - The output current will be 20mA when the sensor measures an empty tank and 4mA when the sensor measures a full tank.

STARTUP CONDITION

This feature allows you to select the startup current when power is first applied to the sensor. The sensor will consume the selected power while it is acquiring the liquid level. When the correct level has been identified, the output will adjust to the level output. Use this feature to avoid false alarms with the controller when power is first applied to the sensor.

- **Empty** - The current output will revert to the selected current value for an empty condition.
  - **4 mA at Bottom** - The sensor will output 4 mA while the sensor powers up.
  - **20 mA at Bottom** - The sensor will output 20 mA while the sensor powers up.
- **Mid Tank (12 mA)** – The sensor will output 12 mA while the sensor powers up.
- **Full** - The output will revert to the selected current value for a full condition.
  - **4 mA at Bottom** - The sensor will output 20 mA while powering up.
  - **20 mA at Bottom** - The sensor will output 4 mA while the sensor powers up.
- **Overfill (22mA)** - The sensor will output 22mA while the sensor powers up.

Note: Right click on any item to open the help menu. To reset the configuration table, press the Clear Screen button.

SENSOR CONFIGURATION (CONTINUED)

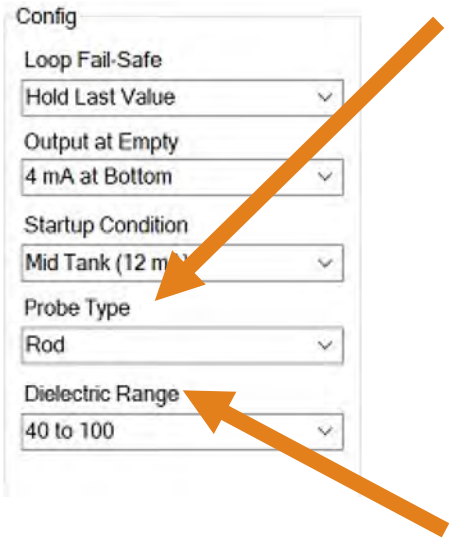

PROBE TYPE

This feature allows you to select the type of probe attached to the feed-through. It is critical to select the correct type of probe.

- **Rod** - Recommended for installations in liquids, in bypass chambers and stilling wells (when combined together with the rod emulate a coaxial probe).
- **Cable** - Recommended for installations in tall tanks and where limited headroom is available.
- Coaxial - Recommended for the use with clean liquids only. It cannot be used with viscous, crystallizing, adhesive, coating, or sticky liquids; fibrous liquids, sludge, slurry, pulp or any liquids containing solid particles.

DIELECTRIC RANGE

This feature allows you to select the dielectric range, which sets the amplitude threshold within the sensor.

- Water based media (water, H2SO4, HCl)
  - **40 to 100**
  - **20 to 39.9**
  - **10 to 19.9**
- Varying dielectrics (Alcohols, Ethyl Acetate, Caster Oil)
  - **9 to 9.9**
  - **8 to 8.9**
  - **7 to 7.9**
  - **6 to 6.9**
  - **5 to 5.9**
  - **4 to 4.9**
  - **3 to 3.9**
- Typical Hydrocarbons (Diesel Fuel, Mineral Oil, Solvents)
  - **2 to 2.9**

Note: Only change the probe type when the probe has been physically changed. Never change this setting to improve sensor performance. This will only cause issue with the operation of EchoWave®. Right click on any item to open the help menu. To reset the configuration table, press the Clear Screen button

Note: It is very important to select the correct range for the dielectric value of the liquid. Choosing an incorrect range will affect the performance of the sensor. Reference a website such as http://flowline.com for dielectric information.

Note: Right click on any item to open the help menu. To reset the configuration table, press the Clear Screen button.

VOLUMTRIC CONFIGURATION

The sensor may be configured in volumetric units (Gallons or Liters) or Distance (Height of Liquid) units (inches, cm, feet or meters). WebCal® will default to Distance (Height of Liquid) with units of Inches. To change units or change from Distance to Volume, press the Volumetric Mode button as located near the center of the window.

Note: The Volumetric Mode button will be highlighted in Blue when a volume output is selected.

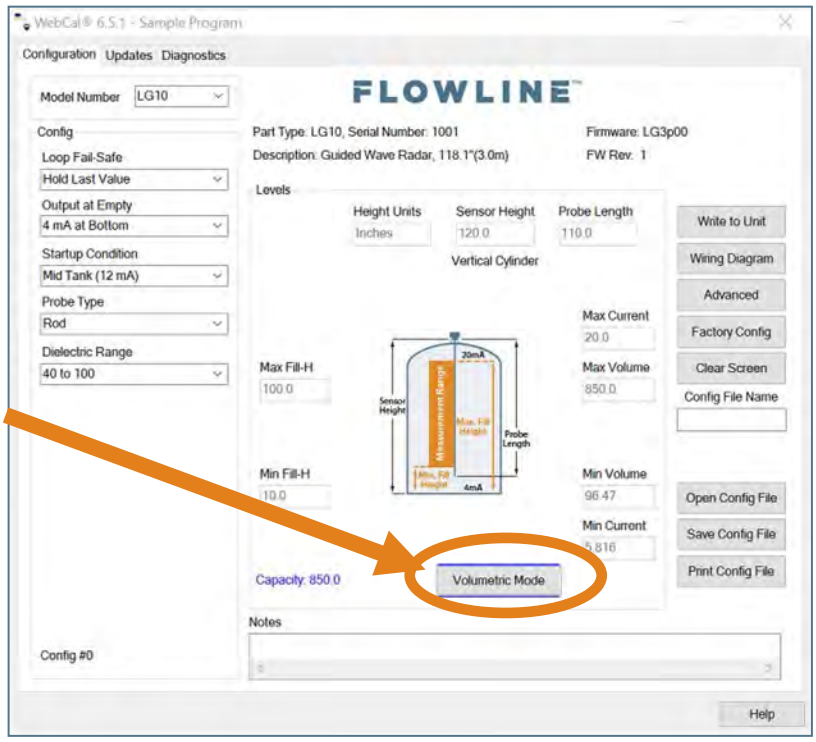

Shape Selection Window: This window will shows the different tank shape options available in WebCal®.

- **Vertical Cylinder**
- **Vertical Cylinder with Cone Bottom**
- **Horizontal Cylinder with End caps**
- **Horizontal Cylinder with Spherical Ends**
- **Spherical**
- **Rectangular**
- **Strapping Table –** Use this feature for manual entry of measured tank distances and volumes.

Select any of the above tank shapes and press OK to confirm.

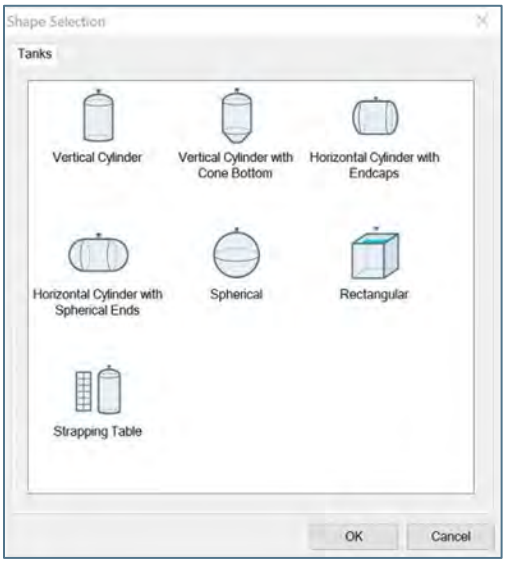

Dimensional Entry - Vertical Cylinder Example

Choose the Sensor Output Units as Distance or Volume. After choosing the Sensor Output Units, select the units of measurement in the pull down to the left.



Units of Measurement	
Distance	**Volume**
Inches	
Cm	Gallons
Feet	Liters
Meters	

Distance – Sensor Output Units (Vertical Cylinder Example)

Enter the dimensions of the tank. You must enter data in all fields shown.

Sensor Height: Distance from the bottom of the tank to the top of the threads.

Max. Fill Height: Distance from the bottom of the tank to the operational full level of liquid (20mA). This setting defines the location of full current output and is the top of the sensor's measurement range.

Min. Fill Height: Distance from the bottom of the tank to the operational empty level of liquid (4mA). This setting defines the location of empty current output and is the bottom of the sensor's measurement range.

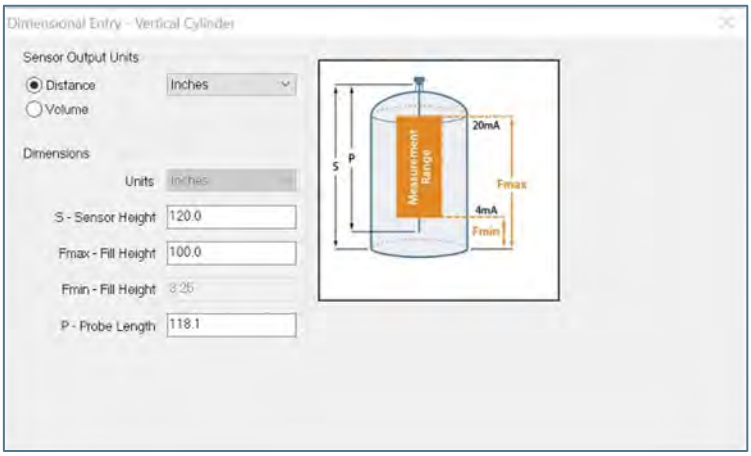

Probe Length: Distance of the probe from the bottom of the threads (feed through) to the end of the probe.

Volume – Sensor Output Units (Vertical Cylinder Example)

Enter the dimensions of the tank. You must enter data in all fields shown.

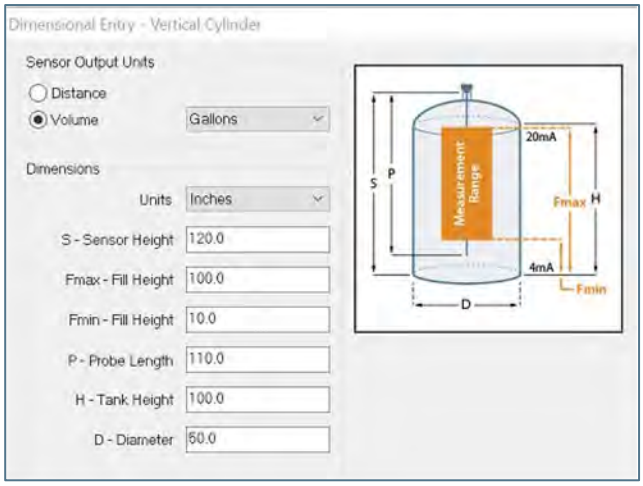

Sensor Height: Distance from the bottom of the tank to the top of the threads.

Max. Fill Height: Distance from the bottom of the tank to the operational full level of liquid (20mA). This setting defines the location of full current output and is the top of the sensor's measurement range.

Min. Fill Height: Distance from the bottom of the tank to the operational empty level of liquid (4mA). This setting defines the location of empty current output and is the bottom of the sensor's measurement range.

Tank Height: Distance from the bottom of the tank to the top of the straight side wall.

Diameter: Distance of the inside tank diameter.

Probe Length: Distance of the probe from the bottom of the feed through to the end of the probe.

Volume – Tank Capacity (Vertical Cylinder Example): After entering the dimensions, press the Capacity button to show the Calculated Capacity of the tank. If the Calculated Capacity is slightly different than the expected capacity, click on the Adjust Capacity box and enter the expected capacity of the tank. If the Adjusted Capacity is more than 10% of the Calculated Capacity, recheck the dimensions information entered above.



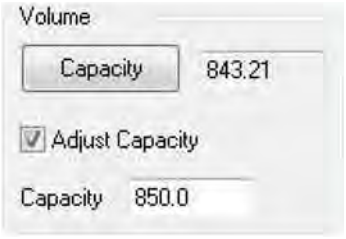

When all dimensions are entered, press the Apply button to return to the previous Configuration window.



- **Apply** – Transfers the dimensions to the original Configuration window.
- **Tanks** – Returns to the previous Shape Selection window.
- **Cancel** – Returns to the Configuration window without saving any information.
- **Help** – Jumps to the Help menu.

TANK LEVEL CONFIRMATION

This section of WebCal® is where you confirm the values set in the previous step. The values were entered under the Dimensional entry window. To edit these settings, you must go back to the Dimensional entry window via the Volumetric Mode button.

- **Height Units:** Units selected for configuration. When used as a device to measure the distance (height of liquid), the options are inches, cm, feet or m. When used as a device to measure the volume of liquid, the options are gallons or liters.
- **Sensor Height:** Distance from the bottom of the tank to the bottom of the top of the threads.
- **Max. Fill-Height:** Distance from the bottom of the tank to the operational full level of liquid (20mA). This setting defines the location of full current output and is the top of the sensor's measurement range.
- **Min. Fill-Height:** Distance from the bottom of the tank to the operational empty level of liquid (4mA). This setting defines the location of empty current output and is the bottom of the sensor's measurement range.
- **Probe Length:** Total length of the probe from the bottom of the probe to the bottom of the threads (feed through).
    - **Cable version only:** The height of the counter-weight is included in this measurement.
- **Capacity:** The total volume of the tank. Only shown when gallons or liters are selected.
- **Maximum Current:** Displayed value of the largest operational current of the sensor's measurement range. Typically 20mA when **Output @ Empty** is set to 4mA.
- **Maximum Volume:** Displayed value of the largest operational volume of the sensor's measurement range. This is the calculated volume of liquid at the **Max. Fill-Height.** This feature is only shown when the sensor is selected to measure the volume of liquid in the tank.
- **Minimum Current:** Displayed value of the smallest operational current of the sensor's measurement range. This value is dependent on the location of the **Min. Fill-Height**.
- **Minimum Volume:** Displayed value of the smallest operational volume of the sensor's measurement range. This is the calculated volume of liquid at the **Min. Fill-Height**. This feature is only shown when the sensor is selected to measure the volume of liquid in the tank.

Note: By extending the empty (4mA) to the bottom of the tank, the 4-20 mA output will track the volume of the tank. This allows any local display to read the actual volume of liquid without the need for any unique configuration. This feature is very useful with any non-linear tanks such as horizontal, spherical or tanks with cone bottoms.

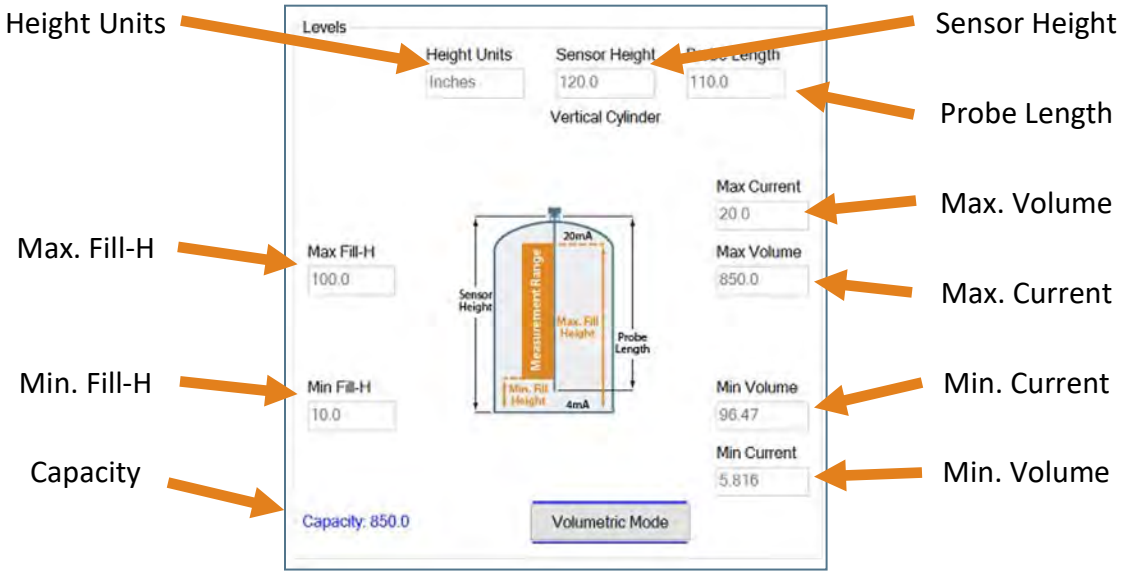

WRITE TO UNIT

After you have entered configurations, selected and configured the Tank Shape and entered the Tank Values, click "**Write to Unit**" and load the configuration into the memory of the sensor. When completed, this configuration will remain inside the sensor memory and will not change unless the sensor is connected to WebCal® and a new configuration is written to the sensor. Loss of power will not change or lose the configuration within sensor memory.

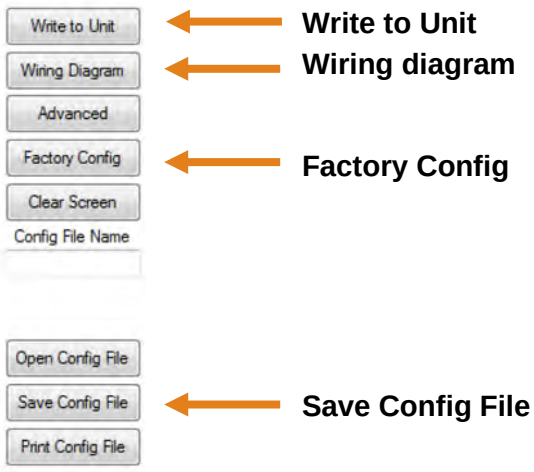

Next, use the file management features to save your configuration by clicking "**Save Config File**" and print your wiring diagram by clicking "**Wiring Diagram**."

"**Save Config File**" will save this configuration as a text file which can be loaded back into WebCal® by pressing the "**Open Config File**" button. It is good practice to save the configuration file for each different configuration with a unique name for easy identification. If using multiple sensors in identical applications, then use of a single configuration file is recommended.

"**Wiring Diagram**" will display a PDF file showing the unique wiring for the specific configuration created in WebCal®. The PDF can be printed or emailed. It is good practice to save the wiring diagram as a backup.

"**Factory Reset**" will return the sensor to its original factory configuration. The factory probe lengths will return to the original maximum range. Sensors with pre-cut lengths of 36" (91.4cm), 72" (182.9cm) and custom lengths will also return to the original factory configuration of 118.1" (300cm) for Rod and Coaxial probes and 216.5" (549.9cm) for Cable probes. ***Note:*** *Make sure to re-enter the correct probe length and click on Write to Unit before installing the EchoWave®.*

Probe Style	Sensor	Probe Length
Rod	LG10-0_ _ _-_ _-_ _ _	118.1" (300cm)
Coaxial	LG10-1_ _ _-_ _-_ _ _	118.1" (300cm)
Cable (includes counter-weight)	LG11-2_ _ _-_ _-_ _ _	216.5" (549.9cm)

CUTTING THE PROBE

If the length of the probe is too long (touches bottom of tank, prevents the sensor from being threaded into the tank or a shorter length is required for the application), the probe can be cut to length in the field. **Note:** The most important requirement for cutting the probe is to protect the housing from being dropped, banging into other objects or swinging freely. Follow the instructions for the appropriate probe style.

ROD

- Place the probe on a sturdy surface.
- Measure and mark the location for the cut.

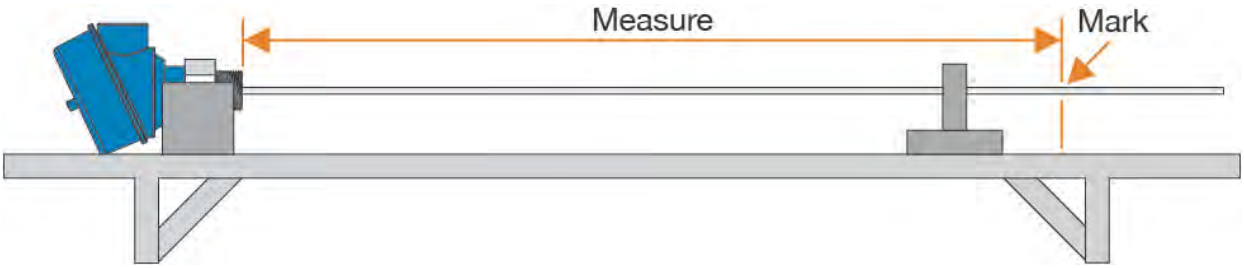

- Secure the rod to prevent it from moving during cutting.
  - Be sure to secure the housing to prevent it from moving when the probe is cut.
- Use a saw with a blade designed to cut 316L SS to cut the probe.
  - Examples include hack saw, diamond wheel rotary tool, etc.
  - Once the probe is cut, trim/file the fresh cut.
- Install the probe per mounting instructions.

COAXIAL

- Place the probe on a sturdy surface.
- Measure and mark the location for the cut on the coaxial shield.

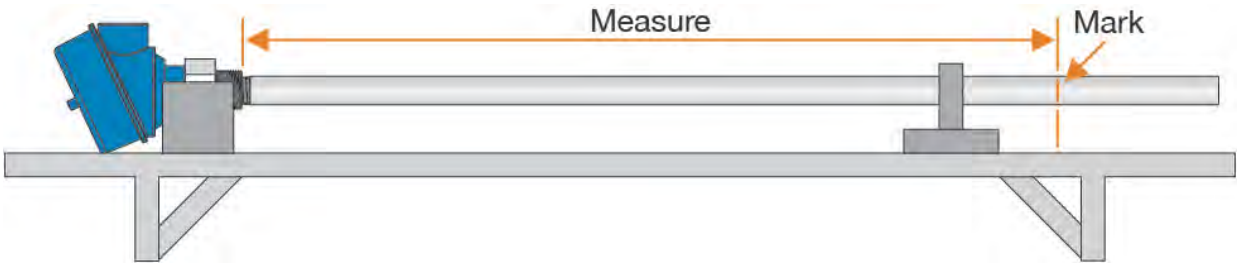

- Unthread the coaxial shield from the GWR sensor.

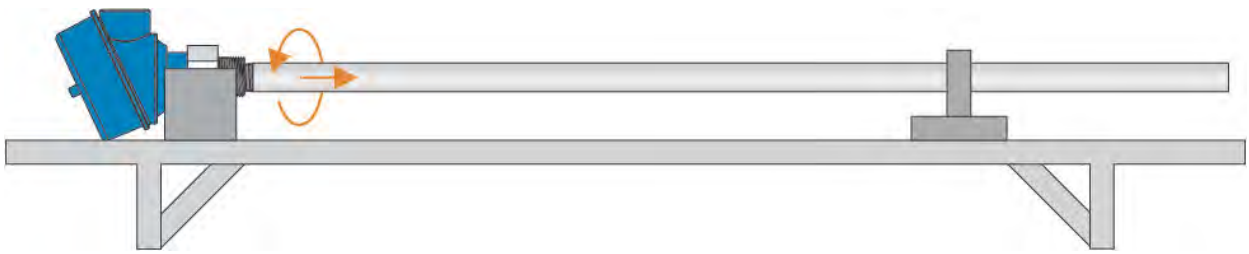

- Measure and mark the location for the cut on the exposed rod.
    - Use the coaxial shield as a guide to confirm both cuts are at the same length.

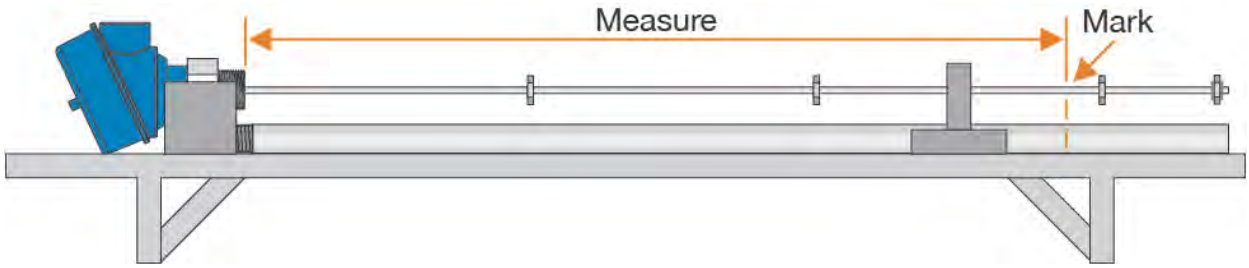

- Cutting the rod
    - Secure the rod to prevent it from moving during cutting.
        - Be sure to secure the housing to prevent it from moving when the probe is cut.
    - Use a saw with a blade designed to cut 316L SS to cut the probe.
        - Examples include hack saw, diamond wheel rotary tool, etc.
        - Once the probe is cut, trim/file the fresh cut.
    - Attach a spacer to the end of probe.
        - Offset the spacer approx. 1/8” (3mm) from the end of the probe.
        - Make sure the remaining spacers are no further than 39.4” (1m) apart.
        - Secure retaining rings on each side of the spacer.

Note: Do not weld the spacers to the probe.

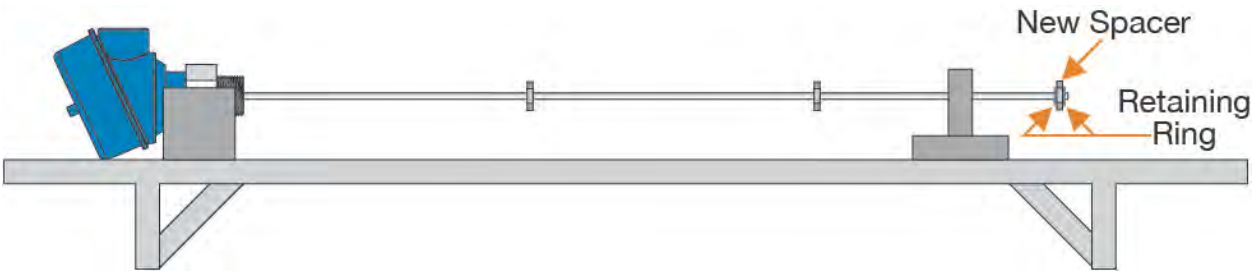

- Cutting the coaxial shield
    - Secure the coaxial shield to prevent it from moving during cutting.
    - Use a pipe cutter with a blade designed to cut 316L SS to cut the coaxial shield.
        - A hack saw can be used to cut the coaxial shield if the pipe cutter is too difficult.
        - Use the initial cut of the pipe cutter as a score line for the hack saw.
        - Once the coaxial shield is cut, trim/file the fresh cut.
- Slide the coaxial shield over the rod making sure not to move the spacers.
- Thread the coaxial shield to the GWR sensor.

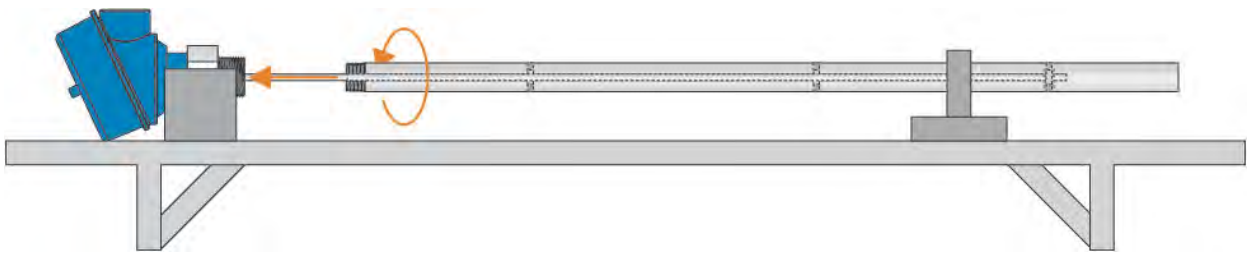

- Install the probe per mounting instructions.

CABLE

- Place the probe on a sturdy surface.
- Measure the location for the cut on the cable.
- Wrap the cable with electrical tape along the area of the cut.
    - This will prevent the cable from fraying while being cut.

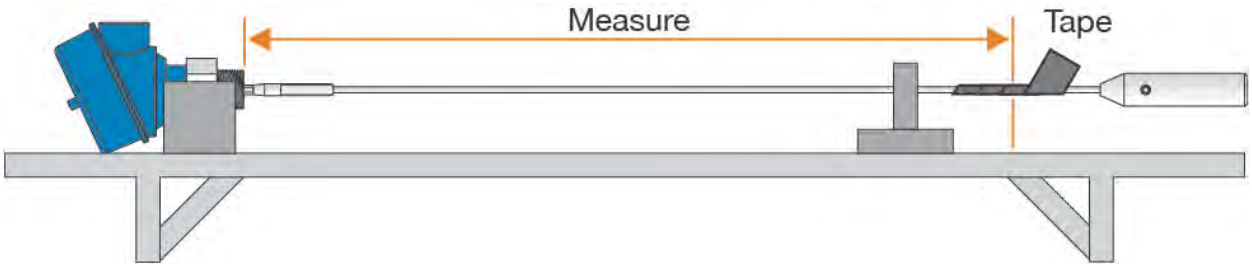

- Mark the location of the cut on the electrical tape.
- Loosen the (¼–20, ⅛ Hex) set screws in the counterweight and remove from the cable.

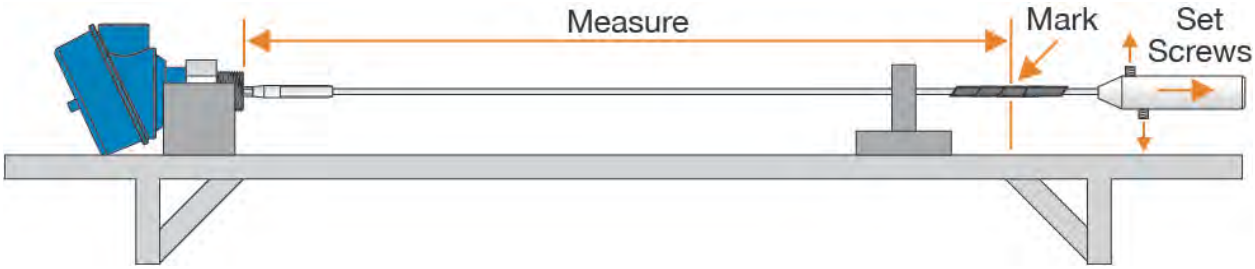

- Secure the cable to prevent it from moving during cutting.
    - Be sure to secure the housing to prevent it from moving when the probe is cut.
- Using a wire cutter or a rotary tool, cut the cable.
    - Once the probe is cut, remove the tape keeping the cable intact.
- Insert the freshly cut cable into the counterweight and tighten the (¼–20, ⅛ Hex) set screws.



- Install the probe per mounting instructions.

FACTORY SETTINGS

			From Bottom (Lowest point of probe)		From Top (Bottom of Mounting Nut)	
Probe Style	**Sensor**	**Probe Length**	**4mA**	**20mA**	**4mA**	**20mA**
Rod	LG10-0_ _ _-_ _	118.1” (300cm)	2.0” (50.8mm)	114.8” (2915mm)	116.8” (2966mm)	3.4” (85.1mm)
Coaxial	LG10-1_ _ _-_ _	118.1” (300cm)	2.0” (50.8mm)	114.8” (2915mm)	116.8” (2966mm)	3.4” (85.1mm)
Cable (includes counter-weight)	LG11-2_ _ _-_ _	216.5” (549.9cm)	7.9” (200.7mm)	219.1” (5566mm)	216.2” (5145mm)	3.4” (85.1mm)

Note: Cable versions of the LG10/LG11 series must account for the counterweight attached to the end of the probe.

TROUBLESHOOTING

PROBLEM	SOLUTION
No LED.	Sensor is not receiving power (10 to 30 VDC). Check wiring to the sensor as well as the power supply.
LED flashes Red.	Sensor cannot acquire a valid level reading. Make sure the sensor is installed properly within the application and the probe is touching liquid.
Sensor is locked on a level above the true level.	Sensor is likely acquiring a false echo from some interference close to the probe. Running an Empty Signal Scan should address this issue.
Probe Length is greater than physical length of the probe.	You may have received a probe that was cut from its original factory setting. When Factory Reset is clicked in WebCal, the default restores this original length. The correct physical length of the probe must be re-entered and written to unit before the sensor is installed in your application.
Liquid level is below the probe, but the sensor indicates a high or full level.	Change the Fail-Safe setting to Hold Last Value or Empty
Liquid level is above the Max. Fill-Height, but the sensor indicates a low or empty level.	Change the Fail-Safe setting to Hold Last Value or Full

WARRANTY

Flowline warrants to the original purchaser of its products that such products will be free from defects in material and workmanship under normal use and service in accordance with instructions furnished by Flowline for a period of two years from the date of manufacture of such products. Flowline's obligation under this warranty is solely and exclusively limited to the repair or replacement, at Flowline's option, of the products or components, which Flowline's examination determines to its satisfaction to be defective in material or workmanship within the warranty period. Flowline must be notified pursuant to the instructions below of any claim under this warranty within thirty (30) days of any claimed lack of conformity of the product. Any product repaired under this warranty will be warranted only for the remainder of the original warranty period. Any product provided as a replacement under this warranty will be warranted for the full two years from the date of manufacture.

RETURNS

Products cannot be returned to Flowline without Flowline's prior authorization. To return a product that is thought to be defective, go to flowline.com, and submit a customer return (MRA) request form and follow the instructions therein. All warranty and non-warranty product returns to Flowline must be shipped prepaid and insured. Flowline will not be responsible for any products lost or damaged in shipment.

LIMITATIONS

This warranty does not apply to products which: 1) are beyond the warranty period or are products for which the original purchaser does not follow the warranty procedures outlined above; 2) have been subjected to electrical, mechanical or chemical damage due to improper, accidental or negligent use; 3) have been modified or altered; 4) anyone other than service personnel authorized by Flowline have attempted to repair; 5) have been involved in accidents or natural disasters; or 6) are damaged during return shipment to Flowline. Flowline reserves the right to unilaterally waive this warranty and dispose of any product returned to Flowline where: 1) there is evidence of a potentially hazardous material present with the product; or 2) the product has remained unclaimed at Flowline for more than 30 days after Flowline has dutifully requested disposition. This warranty contains the sole express warranty made by Flowline in connection with its products. ALL IMPLIED WARRANTIES, INCLUDING WITHOUT LIMITATION, THE WARRANTIES OF MERCHANTABILITY AND FITNESS FOR A PARTICULAR PURPOSE, ARE EXPRESSLY DISCLAIMED. The remedies of repair or replacement as stated above are the exclusive remedies for the breach of this warranty. IN NO EVENT SHALL FLOWLINE BE LIABLE FOR ANY INCIDENTAL OR CONSEQUENTIAL DAMAGES OF ANY KIND INCLUDING PERSONAL OR REAL PROPERTY OR FOR INJURY TO ANY PERSON. THIS WARRANTY CONSTITUTES THE FINAL, COMPLETE AND EXCLUSIVE STATEMENT OF WARRANTY TERMS AND NO PERSON IS AUTHORIZED TO MAKE ANY OTHER WARRANTIES OR REPRESENTATIONS ON BEHALF OF FLOWLINE. This warranty will be interpreted pursuant to the laws of the State of California. If any portion of this warranty is held to be invalid or unenforceable for any reason, such finding will not invalidate any other provision of this warranty.

For complete product documentation, video training, and technical support, go to flowline.com.
For phone support, call 562-598-3015 from 8am to 5pm PST, Mon - Fri.
(Please make sure you have the Part and Serial number available.)