EchoPod®

Ultrasonic Liquid Level Switch, Controller & Transmitter

FLOWLINE™
LEVEL BEST

UG01 & UG03 Series Quick Start



C SA US CE RoHS Compliant

©2018 Flowline, Inc.
All Rights Reserved
Made in USA

WELCOME TO THE ECHOPOD® UG01 & UG03 SERIES QUICK START

The EchoPod® Quick Start provides basic mounting, setup and use instructions for getting the EchoPod® up and running quickly. If you have a non-standard installation or setup requirement that is not addressed here, please refer to the EchoPod® Manual or other support documentation located at flowline.com.

WE DO YOUR LEVEL BEST

Thank you for purchasing EchoPod®. The sensor provides level measurement, switching and/or control for your tank application. This Quick Start includes everything you'll need to get the sensor up and running.

COMPONENTS

Depending on the sensor part number/configuration that was shipped, EchoPod® comes with a 4' (1.2m) cable, Viton® gasket for installation and the Quick Start. Some models have the USB® Key Fob (LI99-2001) included with the EchoPod® and other's do not. Fob's can be purchased separately. A LI99-2001 Fob is required to interface to WebCal® and configure the sensor.



EchoPod®
UG01-0001-40
UG01-0001-41
UG01-0011-40
UG01-0011-41
UG03-0001-40
UG03-0001-41
UG03-0011-40
UG03-0011-41



Viton® gasket (2")
P/N: 210138
G Version Only



USB® Key Fob
P/N: LI99-2001

CONFIGURING ECHOPOD®

EchoPod® is configured through WebCal®, a PC software program. Configuration of your sensor should be performed prior to mounting, since it requires connection to your PC.

STEP 1: INSTALL WEBCAL® SOFTWARE

Download WebCal® software from www.flowline.com/webcal-software onto a PC with the following minimum specifications:

Windows® XP/Vista/7/8/10, 32 or 64-bit system, 10 MB storage space, 256 MB RAM, 1 USB® 2.0 port

You must have an active Internet connection to download WebCal®. Double-click the WebCal® installer to install software before proceeding to Step 2. Installer program will automatically install any required drivers.

STEP 2: CONNECT THE USB® FOB

NOTE: Do not connect the Fob to your computer until after you've installed WebCal® software.

The sensor communicates to WebCal® through the USB® Fob. Prior to plugging the Fob into your computers USB® port, ensure that all external power is disconnected from EchoPod®. The maximum distance between the computer and EchoPod® is 15'.

1. Connect the red, green, white, and black wires from the EchoPod® to the corresponding colored terminals on the Fob.
2. Tighten the terminal screws with a slotted screwdriver.
3. Plug the Fob into your PC's USB® port.

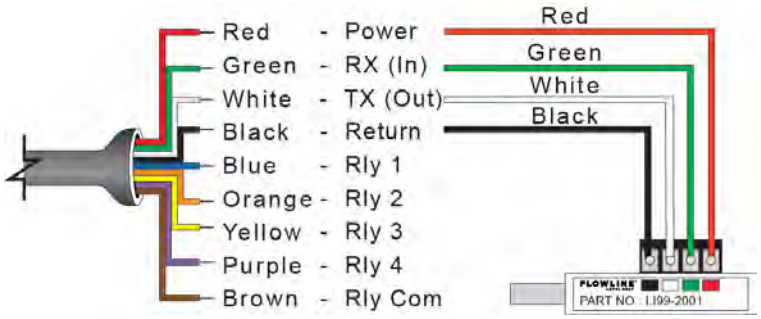

Wiring identical for all series – Use only the Red, Black, Green and White wires.

STEP 3 - MEASURE THE TANK

Measuring the tank is one of the most important aspects in configuring the sensor. When measuring the tank, take into account the location of the sensor with respect to fittings, risers, dome tops and bottoms, and identify where the measurements are taken from the sensor. The HEIGHT and FILL-H settings determine the 4-20mA span and are always measured from the bottom of the tank up.

Relay set points will always be measured from the bottom of the tank up, regardless of the function of the relay (Pump, Valve, Alarm or Independent Relay).

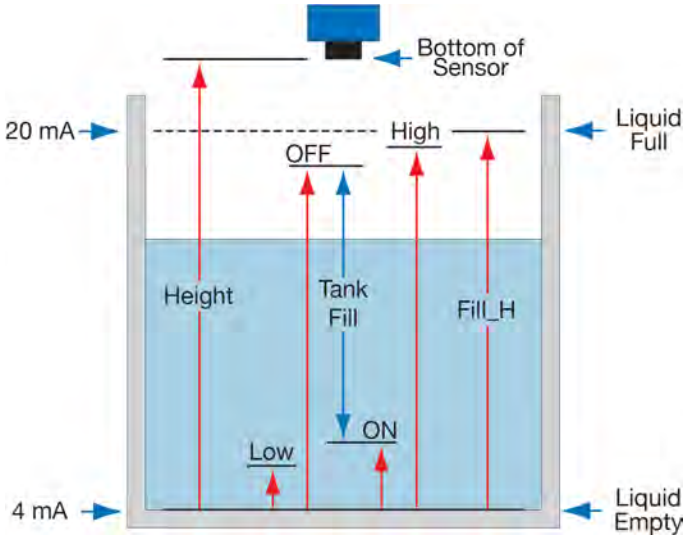

STEP 4 - SENSOR CONFIGURATION

Configures the relays in terms of pump/valve operations and level alarms as well as the setting fail-safe for relays and signal output.

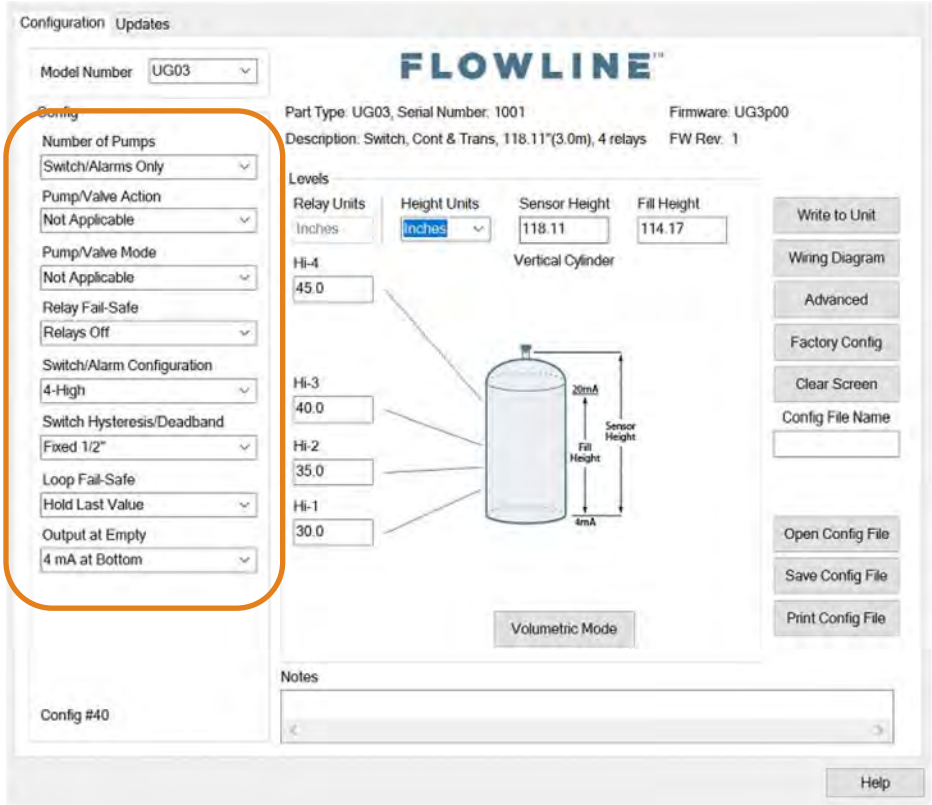

STEP 5 – DIMENSIONAL ENTRY

Distance Mode (default): Output of sensor is based on the distance (height of liquid) in the tank. Any change in liquid level will reflect linearly to the current output. The two values (Sensor Height and Fill-Height) below set the 4-20 mA current span for the sensor. Both values will be set in the units shown under Height Units.

Height Units: Confirm units for use in Sensor Height and Fill-Height settings.

Sensor Height: Sets the location for 4mA. It is based on the distance from the Empty level position (bottom of tank) to the Measurement location for the sensor (bottom of sensor).

Fill-Height: Sets the location for 20mA. It is based on the distance from the Empty level position (bottom of tank) to the Full level position (see below).

Relay Units: Confirm units for use in setting the relays.

Relay Settings: Sets the location for each relay activation point. All values are based upon the distance or volume from Empty level position (bottom of tank). Each setting will have a descriptor for its function. I.E. Hi-1 for high level alarm #1 or Lo-2 for low level alarm #2. ***Note:*** *Units for the relays are independent of the units used for Sensor Height and Fill-Height.*

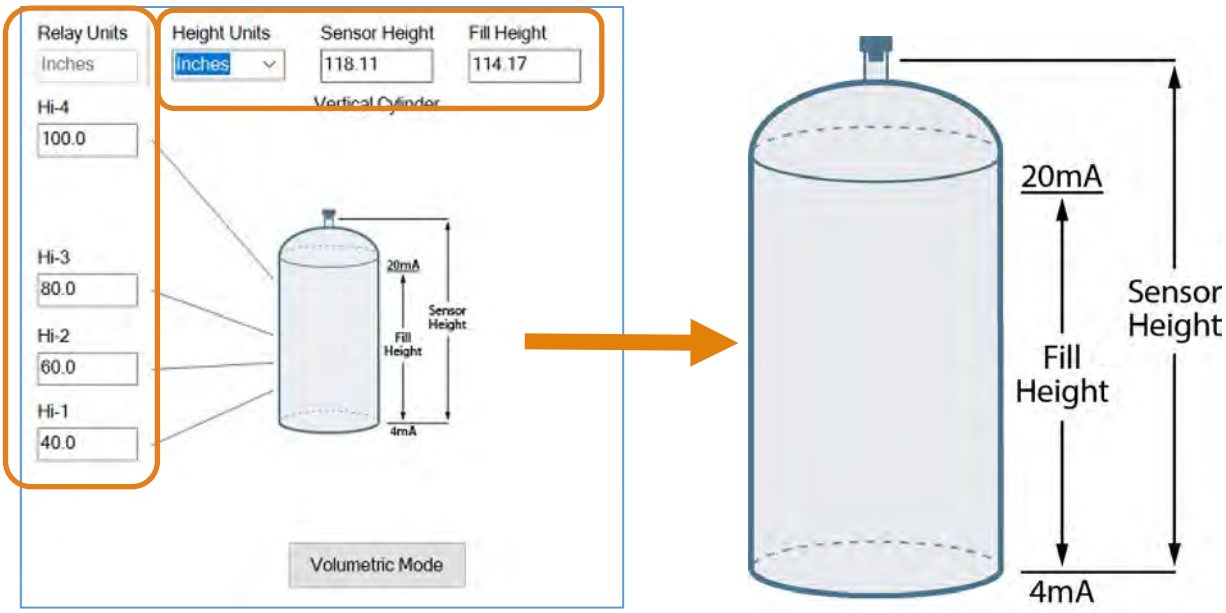

STEP 6 - TANK LEVEL CONFIRMATION

Verify the Height Units, Sensor Height, Fill-Height, Relay Units & Relay Settings. All values were calculated and set in the previous Dimensional Entry window. Make any adjustments if required.

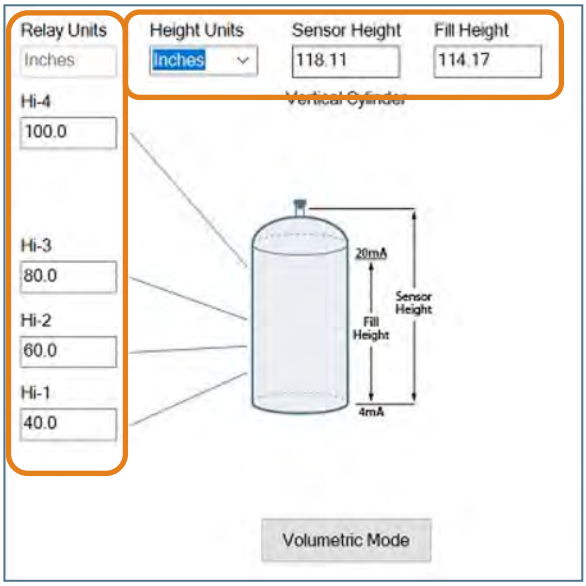

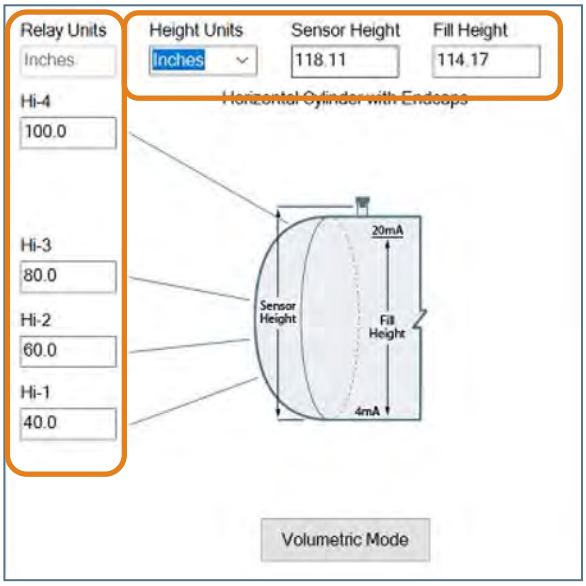

STEP 7 - WRITE TO UNIT

This WebCal®* operation uploads the configuration into the sensor, provides a custom wiring diagram specific to the signal output and/or relay configuration, and saves the configuration file to your hard drive.

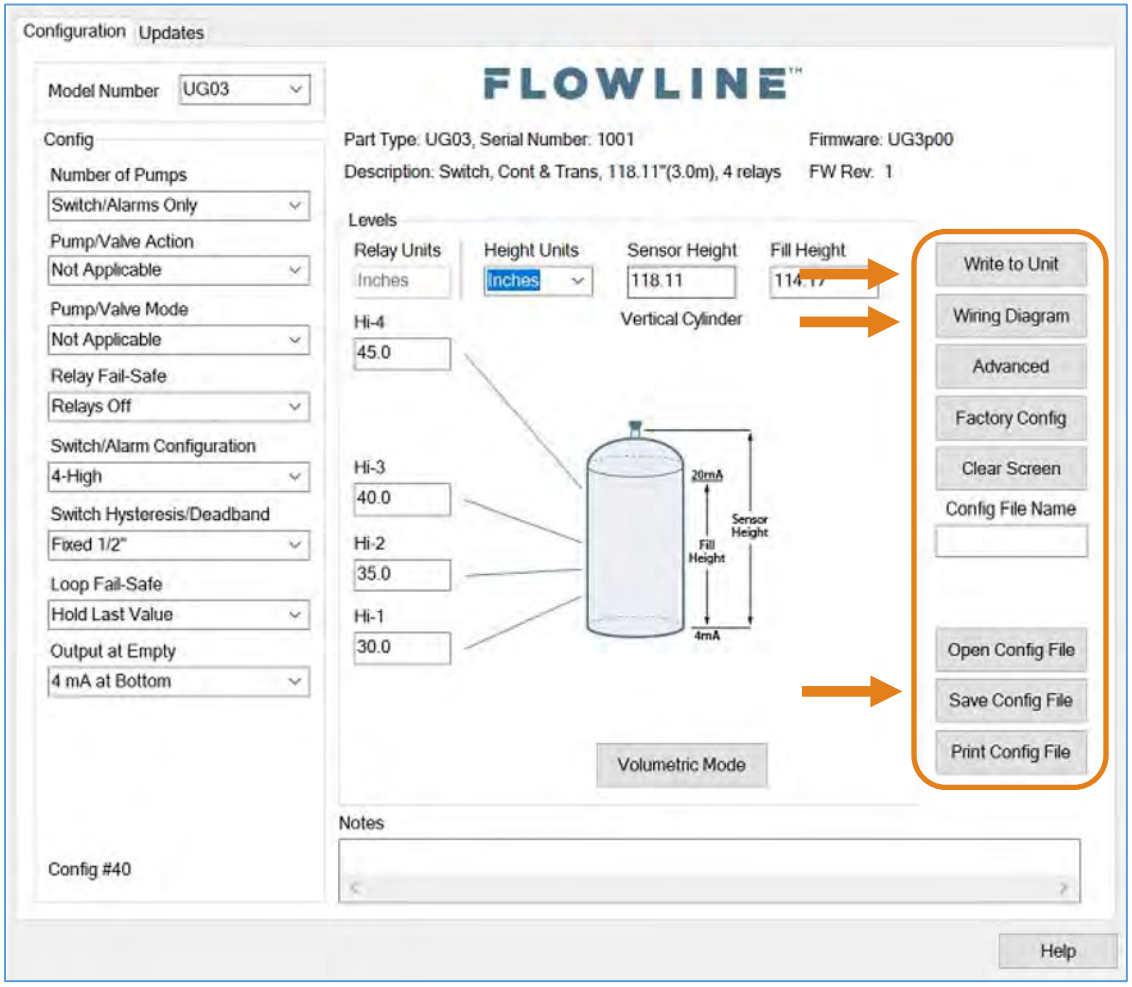

* For complete information on the WebCal® software, please refer to the WebCal® manual located at flowline.com/webcal-software.

Before configuration can be completed:

- You must click the **Write to Unit** button to save the settings to the unit.
- Then, click **Wiring Diagram** for a hard copy of the sensor's settings.
- Finally, enter the file name under which you wish to save the configuration file and click **Save Config File**.

Configuration is now complete.

Disconnect the USB® Fob before continuing to the next step: Mounting the EchoPod®.

MOUNTING ECHOPOD®

The sensor should always be mounted perpendicular to the liquid surface. Insure that there are no restrictions or obstacles in the path of the acoustic signal. For further mounting information, please refer to the EchoPod® manual at www.flowline.com.

Installation in existing 3” fittings:
Use a LM52-2400 3” thread x 2” thread adapter or a LM52-2410 3” slip x 3” thread adapter.



LM52-2400

Basic Tank Installation:
Use a 2” bulkhead fitting, such as the LM52-2890 bulkhead fitting.

Use a larger bulkhead fitting, such as the LM52-3890 with a reducer bushing such as the LM52-2400.

Use a flange with a 2” thread, such as the LM52-2850.

Weld a plastic 2” half coupling to the tank top.

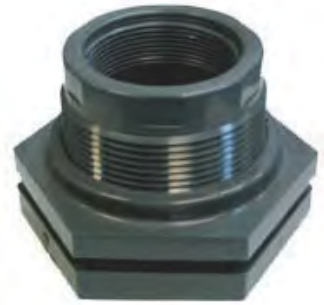

LM52-2890

Mounting in Riser:
Installations with tall, narrow risers can impede the acoustic signal. 2" diameter risers should be no taller than 4". Larger diameter risers should be no taller than 12". For best results, follow a 2:1 Height to Inner Diameter ratio (example: 8” High to 4” Inner Diameter).

Installation in open tanks and sumps:
Use Flowline's LM50-1001 side mount bracket.

> ***Note:*** *The Side Mount Bracket (LM50 series) is not designed for use with stand pipes or as a method to secure stand pipes. There are too few threads to properly hold the sensor and the stand pipe.*



LM52-2850



LM50-1001

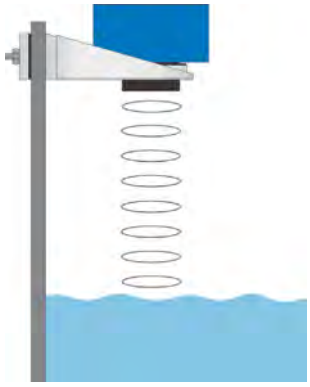

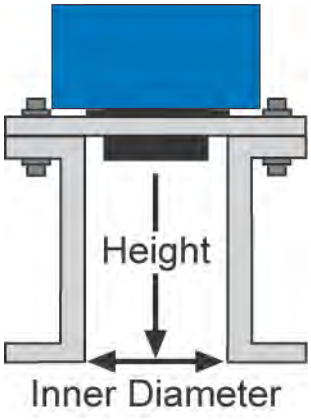

Mounting in Riser

IMPORTANT MOUNTING GUIDELINES

1. Never mount the sensor at an angle.
2. Liquid should never enter the dead band.
3. Mount sensor at least 3” from the side wall.
4. Never mount the sensor in a vacuum.
5. Do not obstruct the sensor’s beam width with objects underneath the sensor.
6. Avoid mounting in the center of a dome top tank.
7. In a cone bottom tank, position the sensor over the deepest part of the tank.
8. Avoid mounting in a riser where the sensor is recessed more than twice the diameter of the riser.

MOUNTING IN STAND-PIPE

A stand-pipe may be used to dampen turbulence, separate surface foam from the point of measurement or increase performance in heavy vapor. When mounting the sensor in a stand-pipe, the minimum diameter of the pipe is 2”. Larger diameter pipes can be used. The pipe should be attached with a coupling or tank adapter and reducer bushing. Avoid the use of multiple pipe fittings when possible. An ideal mount would be to select a 3” tank adapter (S x T or S x S) and connect the pipe to the inside slip and use a reducer bushing to attach the sensor (see example below).

The pipe length should run the measurement span and the bottom of the pipe should remain submerged at all times to prevent foam from entering the pipe. Cut the bottom end of the pipe at 45° and drill a 1/4”pressure equalization hole high in the sensor’s dead band. Locate the stand-pipe away from pump outlets and/or other sources of substantial turbulence which might cause the liquid in the pipe to oscillate.

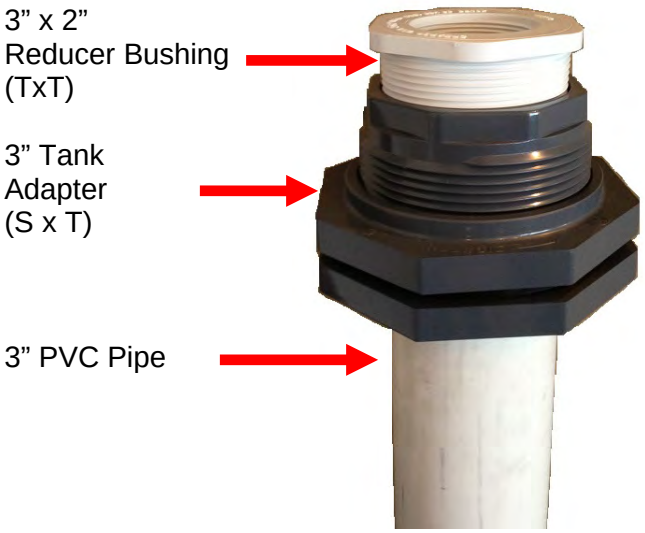

Stand-Pipe Example

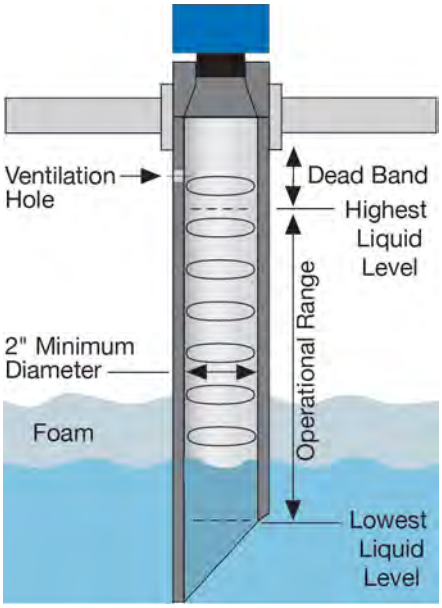

Stand-Pipe Mounting

WIRING ECHOPOD®

After mounting the sensor, make the necessary electrical connections. A wiring diagram with specific recommendations for the sensor's configuration can be printed from the WebCal® program. A typical wiring diagram is shown on the next page.

UG01 & UG03 Series

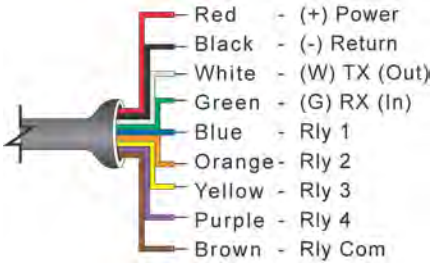

Red & Black: Red (Power) and Black (Return) leads are for connection to a 24 VDC power supply or to a 4-20 mA loop power source. The Red and Black wires can be extended up to 1,000 feet using a 22-gauge or larger wire; however do not extend the green and white wires beyond 15'.

White & Green: White (TX) and Green (RX) leads are reserved for use with WebCal® communication and should not be connected during usage in the application. These wires should not be connected to WebCal® while power is supplied from any source other than the LI99 series Fob. The maximum cable distance between the computer and EchoPod® is 15'. **Note:** Never allow the white or green wires to touch any power supply.

Blue, Orange, Yellow, Purple & Brown: Blue (Rly1), Orange (Rly2), Yellow (Rly3) & Purple (Rly) wires are the relay contacts (normally open) from each of the relays respectively. The Brown wire (RLY Common) is the common for all the relays. Relay selection is determined by the configuration in WebCal®.

Note: *EchoPod® uses latching relays. When power is removed to the sensor, the relays will remain in their last state. For example, if the relay is energized when power is removed, the relay will remain in the energized state.*

WIRING ECHOPOD®

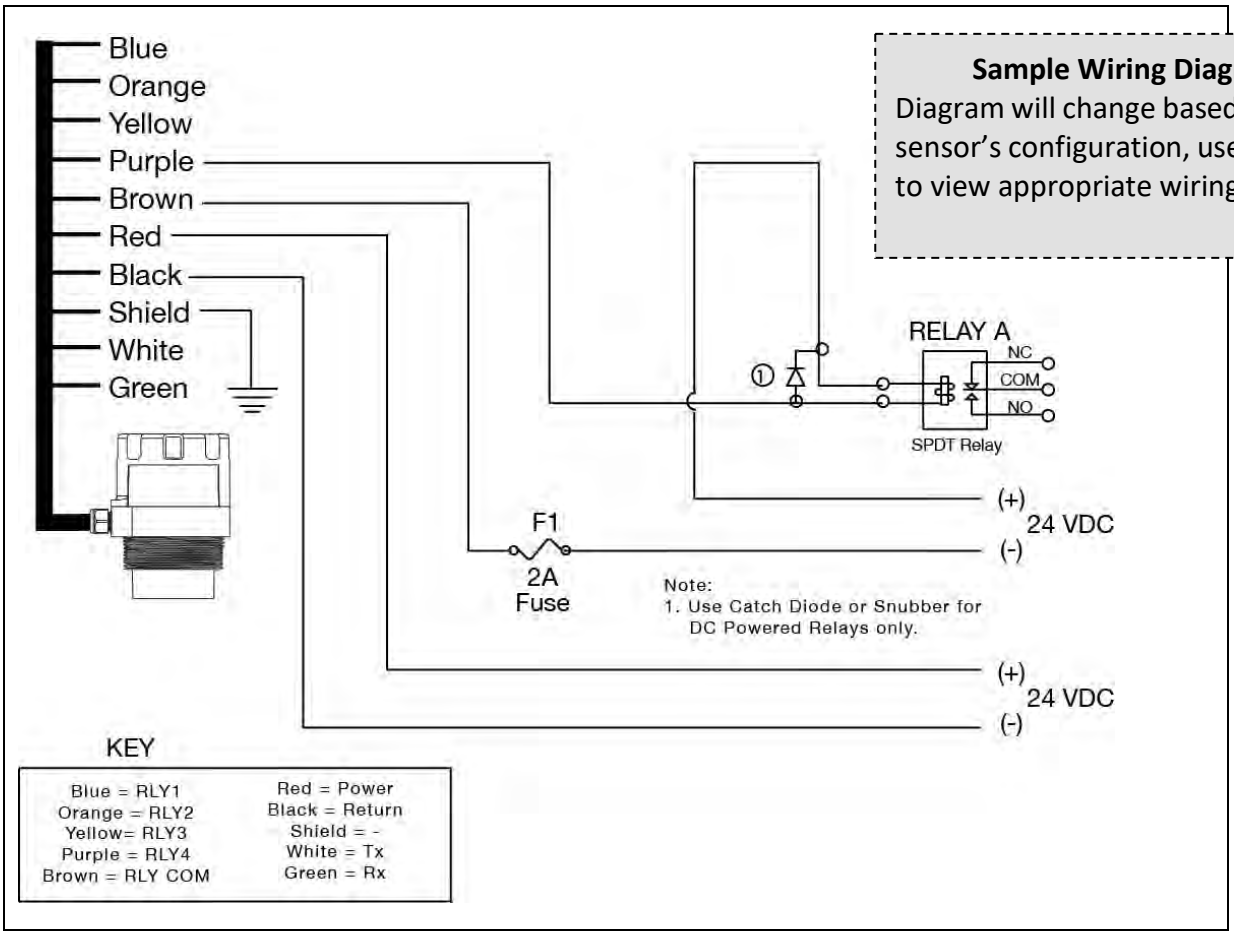

Typical wiring diagram shown.

Diagrams will change based upon your exact sensor series and configuration. Print and use the appropriate wiring diagram in WebCal®.

GENERAL NOTES FOR ELECTRICAL CONNECTIONS, USAGE AND SAFETY:

- Where personal safety or significant property damage can occur due to a spill, the installation must have a redundant backup safety system.
- Wiring should always be completed by a licensed electrician.
- Supply voltage should never exceed 28 VDC.
- Do not exceed 28 VDC power on the relays within EchoPod®.
- Always use stepper relays between the sensor and external loads. For DC circuits use a catch diode such as 1N4148 shown above.
- Protect the sensor from excessive electrical spikes by isolating the power, whenever possible.
- The sensor materials must be chemically compatible with the liquids to be measured.
- Design a fail-safe system for possible sensor and/or power failure.
- Never use the sensor in environments classified as hazardous.

COMMON WIRING TO DISPLAY, CONTROLLERS & PLC'S

DataView™ LI55 Series
Level Controller

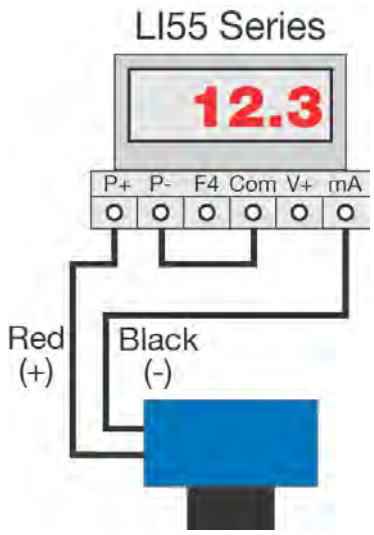

DataLoop™ LI23 Series
Level Indicator w/o Backlight

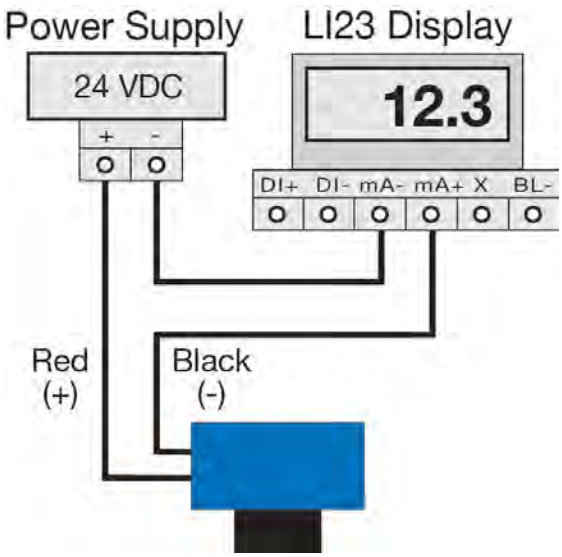

Generic Loop Powered Display

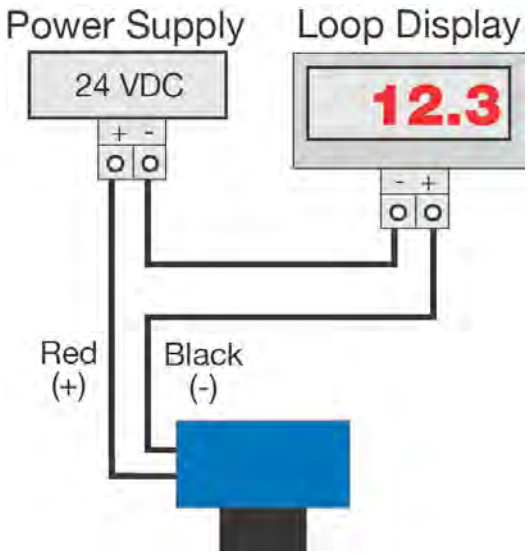

Generic PLC

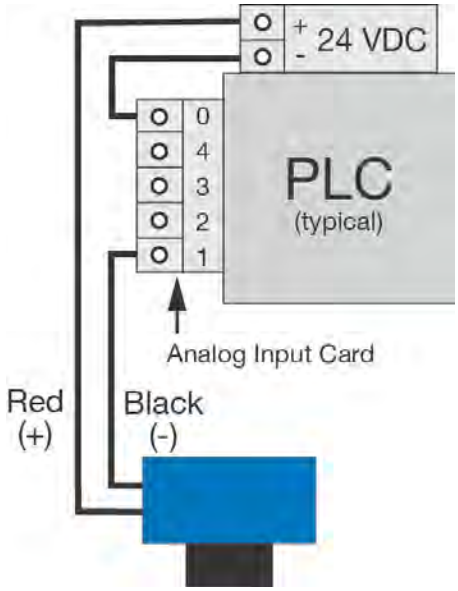

WARRANTY

Flowline warrants to the original purchaser of its products that such products will be free from defects in material and workmanship under normal use and service in accordance with instructions furnished by Flowline for a period of two years from the date of manufacture of such products. Flowline's obligation under this warranty is solely and exclusively limited to the repair or replacement, at Flowline's option, of the products or components, which Flowline's examination determines to its satisfaction to be defective in material or workmanship within the warranty period. Flowline must be notified pursuant to the instructions below of any claim under this warranty within thirty (30) days of any claimed lack of conformity of the product. Any product repaired under this warranty will be warranted only for the remainder of the original warranty period. Any product provided as a replacement under this warranty will be warranted for the full two years from the date of manufacture.

RETURNS

Products cannot be returned to Flowline without Flowline's prior authorization. To return a product that is thought to be defective, go to flowline.com, and submit a customer return (MRA) request form and follow the instructions therein. All warranty and non-warranty product returns to Flowline must be shipped prepaid and insured. Flowline will not be responsible for any products lost or damaged in shipment.

LIMITATIONS

This warranty does not apply to products which: 1) are beyond the warranty period or are products for which the original purchaser does not follow the warranty procedures outlined above; 2) have been subjected to electrical, mechanical or chemical damage due to improper, accidental or negligent use; 3) have been modified or altered; 4) anyone other than service personnel authorized by Flowline have attempted to repair; 5) have been involved in accidents or natural disasters; or 6) are damaged during return shipment to Flowline. Flowline reserves the right to unilaterally waive this warranty and dispose of any product returned to Flowline where: 1) there is evidence of a potentially hazardous material present with the product; or 2) the product has remained unclaimed at Flowline for more than 30 days after Flowline has dutifully requested disposition. This warranty contains the sole express warranty made by Flowline in connection with its products. ALL IMPLIED WARRANTIES, INCLUDING WITHOUT LIMITATION, THE WARRANTIES OF MERCHANTABILITY AND FITNESS FOR A PARTICULAR PURPOSE, ARE EXPRESSLY DISCLAIMED. The remedies of repair or replacement as stated above are the exclusive remedies for the breach of this warranty. IN NO EVENT SHALL FLOWLINE BE LIABLE FOR ANY INCIDENTAL OR CONSEQUENTIAL DAMAGES OF ANY KIND INCLUDING PERSONAL OR REAL PROPERTY OR FOR INJURY TO ANY PERSON. THIS WARRANTY CONSTITUTES THE FINAL, COMPLETE AND EXCLUSIVE STATEMENT OF WARRANTY TERMS AND NO PERSON IS AUTHORIZED TO MAKE ANY OTHER WARRANTIES OR REPRESENTATIONS ON BEHALF OF FLOWLINE. This warranty will be interpreted pursuant to the laws of the State of California. If any portion of this warranty is held to be invalid or unenforceable for any reason, such finding will not invalidate any other provision of this warranty.

For complete product documentation, video training, and technical support, go to flowline.com.
For phone support, call 562-598-3015 from 8am to 5pm PST, Mon - Fri.
(Please make sure you have the Part and Serial number available.)