EchoBeam® LR85

80 GHz Radar Liquid and Solids Level Transmitter

FLOWLINE™ LEVEL BEST

Performance

Offered in four models, EchoBeam® is the most reliable and easy-to-use non-contact level sensor. Flowline's 80 GHz radar technology is unaffected by most media, process or environmental factors, and our intuitive LevelTap™ App makes configuration simple.

	LR80	LR81	LR83	LR85
Range:	Liquid: 32.8' (10m) Solids: 16.4' (5m)	Liquid: 98.4' (30m) Solids: 49.2' (15m)	Liquid: 98.4' (30m) Solids: 49.2' (15m)	**Liquid: 393.7' (120m) Solids: 196.8' (60m)**
Accuracy:	±5mm	±2mm	±2mm	**±2mm**
Output:	4-20 mA	4-20 mA w/HART, Modbus or SDI-12	4-20 mA w/HART or Modbus	**4-20 mA w/HART or Modbus**
Class.:	GP	GP, IS or DP	GP or IS	**GP or IS**
Max Temp.:	60° C.	80° C.	100° C.	**120° C.**
Termination:	Cable	Cable	Conduit	**Conduit**
Application:	Basic	Challenging	Challenging	**Extreme**

LR85-0300 with thread mount



PFA antenna with 316 rotational flange and dust purge for solids.



Application

The LR85 general purpose or intrinsically safe 80 GHz radar sensor provides continuous level measurement up to 196.8' (60m) for solids or 393.7' (120m) for liquids, with a 4-20 mA with HART or Modbus signal output. The sensor is wirelessly configured over Bluetooth via our LevelTap™ App which enables you to see the level, verify the status, and manage the settings of connected sensors from the safety of the ground or nearby catwalk. The sensor measures solids and liquid media with a dielectric constant value ≥ 1.6, such as pellet, grain, powder or aggregate solids, and water, chemical or petroleum-based liquids. Select this sensor for tall dusty silos and bunkers or difficult liquid process applications.



Push button display provides local indication and optional configuration, and works in parallel with LevelTap.

LR85-0330 with flange mount

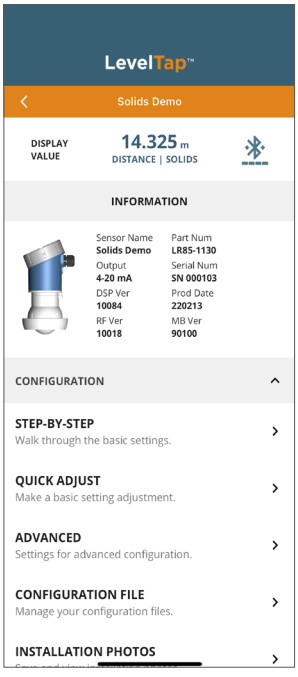

Features

- 80 GHz technology provides reliable, maintenance-free operation
- Measures with significant dust, agitation, foam or low dielectrics
- 4° beam is ideal for applications with limited measurement space
- Rugged PFA antenna provides the highest corrosion resistance
- Offered in thread or gimbal flange mount with optional air purge
- IP66/67 enclosure for outdoor installations exposed in all weather
- LCD push button display for tank level indication and adjustment
- Measures level height or air gap distance and tank or silo volume
- Configuration via LevelTap™ App, LCD display, HART or Modbus

Configuration

Download the free LevelTap™ App at the Apple Store or Google Play, register and go to Demo Sensors. There you can view level status and step-by-step or advanced configuration examples prior to sensor purchase.

© 2026 Flowline | 10500 Humbolt Street, Los Alamitos, CA 90720 USA **p** 562.598.3015 **f** 562.431.8507 **w** flowline.com **DS310350 Rev B**

EchoBeam® LR85

80 GHz Radar Liquid and Solids Level Transmitter

FLOWLINE™ LEVEL BEST

Specifications

Maximum range:	Solids: 196.8' (60m) with media dielectric ≥ 6 and minimal dust Liquid: 393.7' (120m) with media dielectric ≥ 10 and minimal agitation
Frequency:	80 GHz., W-band, FMCW
Accuracy:	0.4m to 30m: ± 2mm 0.00m to 0.39m: ± 10mm
Dead band:	0" (0mm)
Beam angle:	4°
Min. dielectric:	≥ 1.6
Bluetooth version:	Bluetooth 5.0
Bluetooth range:	26.2' (8m)
Configuration:	LevelTap™ App (IOS & Android) or push button
Memory:	Non-volatile
Display type:	LCD, dot matrix
Signal output:	_ 3 _ 0: 4-20 mA, two-wire, HART 7 0 3 _ 1: Modbus, RS485, 9600 baud
Max. signal dist:	_ 3 _ 0: 1,000' (304m) 0 3 _ 1: 3,937' (1200m)
Signal fail-safe:	Selectable high, low or hold last value
Wire interface:	_ 3 _ 0: 2-pole terminal block _ 3 _ 1: 4-pole terminal block
Supply voltage:	_ 3 _ 0: 12-30 VDC 0 3 _ 1: 9-27 VDC
Max. consumption:	_ 3 _ 0: 22.5 mA 0 3 _ 1: 1.5 watt
Process temp.:	F: -40° to 248° C: -40° to 120°
Temp. comp.:	Automatic
Storage temp.:	F: -40° to 176° C: -40° to 80°
Pressure:	_ 30 _: & _ 31 _: -14.5 to 43.5 psi (-1 to 3 bar) _ 33 _: & _ 35 _: Atmospheric
Enclosure rating:	NEMA 4X (IP66/67)
Conduit connect.:	_ 30 _: & _ 33 _: 1/2" NPT _ 31 _: & _ 35 _: M20
Encl. material:	PBT-FR (polybutylene terephthalate)
Encl. cap. material:	PC (clear polycarbonate)
Antenna material:	PFA (natural perfluoroalkoxy)
Flange material:	316L (stainless steel)
Process mount:	_ 30 _: 3" NPT _ 31 _: M80x3 with Viton GLT gasket _ 33 _: 3" ANSI gimbal flange _ 35 _: DIN80 PN6 gimbal flange
Mount gasket:	_ 31 _: Viton GLT (fluoroelastomer)
Air purge conn.:	_ 33 _ & _ 35 _: 1/4" tube compression fitting

Classification:	0 _ _ _: General purpose, cCSAus 1 _ _ 0: Intrinsically safe, cCSAus, ATEX, IECEx
Approvals:	0 _ _ _: C22.2 No. 61010-1-12 1 _ _ 0: Class I, Division 1, Groups A,B,C,D T6...T4 Class I, Zone 0, AEx ia IIC T6...T4 Ga Ex ia IIC T6...T4 Ga II 1G Ex ia IIC T6...T4 Ga
Entity parameters:	0 _ _ _: N/a 1 _ _ 0: Install per control drawing #8X-CONWIRE
Compliance:	FCC: Part 15.256, 15.209, 15C ISED IC: RSS-102, RSS-211, RSS-247 UKCA RER 2017: 6(1)(a), 6(1)(b), 6(2) CE/RED 2014/53/EU: EN 302 372, EN 302 729, EN 301 489-1, -33, EN 300 328 SRRC: (No. [2002] 353) RoHS, REACH, CRN, conflict minerals

Dimensions

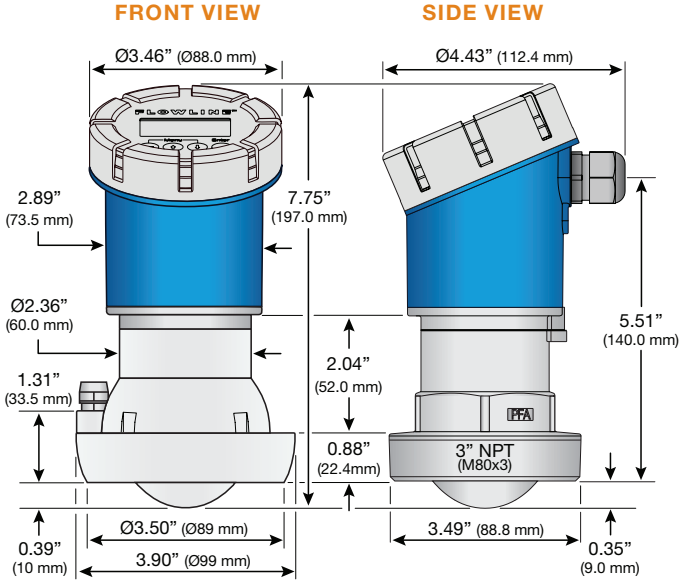

Ordering

LR85 - ☐ **3** ☐ ☐

CLASSIFICATION (1)

0	General Purpose
1	Intrinsically Safe

PROCESS MOUNT (2)

0	3" NPT
1	M80x3 with Viton Gasket
3	3" ANSI Gimbal Flange
5	DIN80 Gimbal Flange

SIGNAL OUTPUT

0	4-20 mA with HART
1	Modbus

NOTES

1) The intrinsically safe model is available for liquid applications with a 4-20 mA with HART signal output only. Order the LB12-1001 intrinsic safety barrier to complete your hazardous solution.
2) The threaded mount is typically applied in liquid applications. The gimbal flange is intended for solids applications. It allows the antenna to be aimed against the angle of material repose and includes a 1/4" air purge connector through which dust build-up can be optionally blown off the antenna.



DataView™
LI55
Controller



DataLoop™
LI23-24
Indicators

© 2026 Flowline | 10500 Humbolt Street, Los Alamitos, CA 90720 USA **p** 562.598.3015 **f** 562.431.8507 **w** flowline.com **DS310270 REV B**