EchoBeam® LR83

80 GHz Radar Liquid and Solids Level Transmitter

FLOWLINE™
LEVEL BEST

Performance

Offered in four models, EchoBeam® is the most reliable and easy-to-use non-contact level sensor. Flowline's 80 GHz radar technology is unaffected by most media, process or environmental factors, and our intuitive LevelTap™ App makes configuration simple.

	LR80	LR81	**LR83**	LR85
Range:	Liquid: 32.8' (10m) Solids: 16.4' (5m)	Liquid: 98.4' (30m) Solids: 49.2' (15m)	**Liquid: 98.4' (30m) Solids: 49.2' (15m)**	Liquid: 393.7' (120m) Solids: 196.8' (60m)
Accuracy:	±5mm	±2mm	**±2mm**	±2mm
Output:	4-20 mA	4-20 mA w/HART, Modbus or SDI-12	**4-20 mA w/HART or Modbus**	4-20 mA w/HART or Modbus
Class.:	GP	GP, IS or DP	**GP or IS**	GP or IS
Max Temp.:	60° C.	80° C.	**100° C.**	120° C.
Termination:	Cable	Cable	**Conduit**	Conduit
Application:	Basic	Challenging	**Challenging**	Extreme

Application

The LR83 general purpose or intrinsically safe 80 GHz radar sensor provides continuous level measurement up to 98.4' (30m) for liquids or 49.2' (15m) for solids, with a 4-20 mA with HART or Modbus signal output. The sensor is wirelessly configured over Bluetooth via our LevelTap™ App which enables you to see the level, verify the status, and manage the settings of connected sensors from the safety of the ground or nearby catwalk. The sensor measures liquid and solids media with a dielectric constant value ≥ 1.6, such as water, chemical or petroleum-based liquids, and pellet, grain, powder or aggregate solids. Select this sensor for tank, sump, weir, canal, reservoir, silo, bin, conveyor or stockpile applications.

Features

- 80 GHz technology provides reliable, maintenance-free operation
- Measures level height, air gap, tank volume or open channel flow
- Rugged PVDF antenna and PBT-FR enclosure for corrosive media
- IP66/67 enclosure for outdoor installations exposed in all weather
- LCD push button display for level or flow indication and adjustment
- Zero dead band maximizes the potential fill capacity of small tanks
- Optionally measures through top wall of plastic or fiberglass tanks
- Configuration via LevelTap™ App, LCD display, HART or Modbus
- Low 9V or 12V operation is ideal for battery powered systems

Configuration

Download the free LevelTap™ App at the Apple Store or Google Play, register and go to Demo Sensors. There you can view level status and step-by-step or advanced configuration examples prior to sensor purchase.



Natural contaminent free PVDF antenna.



Push button display provides local indication and optional configuration, and works in parallel with LevelTap.

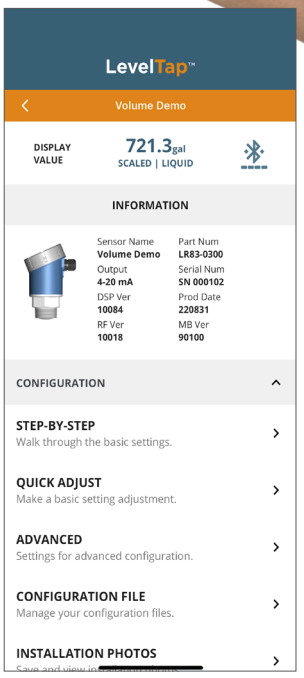

© 2026 Flowline | 10500 Humbolt Street, Los Alamitos, CA 90720 USA **p** 562.598.3015 **f** 562.431.8507 **w** flowline.com **DS310320 Rev B**

EchoBeam® LR83

80 GHz Radar Liquid and Solids Level Transmitter

FLOWLINE™ LEVEL BEST

Specifications

Maximum range:	Liquid: 98.4’ (30m) with media dielectric ≥ 10 and no agitation Solids: 49.2’ (15m) with media dielectric ≥ 6 and no dust
Frequency:	80 GHz., W-band, FMCW
Accuracy:	0.4m to 30m: ± 2mm 0.00m to 0.39m: ± 10mm
Dead band:	0” (0mm)
Beam angle:	6°
Min. dielectric:	≥ 1.6
Bluetooth version:	Bluetooth 5.0
Bluetooth range:	26.2’ (8m)
Configuration:	LevelTap™ App (IOS & Android) or push button
Memory:	Non-volatile
Display type:	LCD, dot matrix
Signal output:	_ _ _ 0: 4-20 mA, two-wire, HART 7 0 _ _ 1: Modbus, RS485, 9600 baud
Max. signal dist.:	_ _ _ 0: 1,000’ (304m) 0 _ _ 1: 3,937’ (1200m)
Signal fail-safe:	Selectable high, low or hold last value
Wire interface:	_ _ _ 0: 2-pole terminal block 0 _ _ 1: 4-pole terminal block
Supply voltage:	_ _ _ 0: 12-30 VDC 0 _ _ 1: 9-27 VDC
Max. consumption:	_ _ _ 0: 22.5 mA 0 _ _ 1: 1.5 watt
Process temp.:	F: -40° to 212° C: -40° to 100°
Temp. comp.:	Automatic
Storage temp.:	F: -40° to 176° C: -40° to 80°
Pressure:	-14.5 to 43.5 psi (-1 to 3 bar)
Enclosure rating:	NEMA 4X (IP66/67)
Conduit connect.:	_ _ 0 _: 1/2” NPT _ _ 1 _: M20
Encl. material:	PBT-FR (polybutylene terephthalate)
Encl. cap. material:	PC (clear polycarbonate)
Antenna material:	PVDF (natural polyvinylidene fluoride)
Process mount:	_ _ 0 _: 1 1/2” NPT _ _ 1 _: 1 1/2” G
Mount gasket:	_ _ 0 _: N/a _ _ 1 _: Viton GLT (fluoroelastomer)
Classification:	0 _ _ _: General purpose, cCSAus 1 _ _ 0: Intrinsically safe, cCSAus, ATEX, IECEx
Approvals:	0 _ _ _: C22.2 No. 61010-1-12 1 _ _ 0: Class I, Division 1, Groups A,B,C,D T6...T5 Class I, Zone 0, AEx ia IIC T6...T5 Ga Ex ia IIC T6...T5 Ga II 1G Ex ia IIC T6...T5 Ga
Entity parameters:	0 _ _ _: N/a 1 _ _ 0: Install per control drawing #8X-CONWIRE
Compliance:	FCC: Part 15.256, 15.209, 15C ISED IC: RSS-102, RSS-211, RSS-247 UKCA RER 2017: 6(1)(a), 6(1)(b), 6(2) CE/RED 2014/53/EU: EN 302 372, EN 302 729, EN 301 489-1, -33, EN 300 328 SRRC: (No. [2002] 353) RoHS, REACH, CRN, conflict minerals

Dimensions

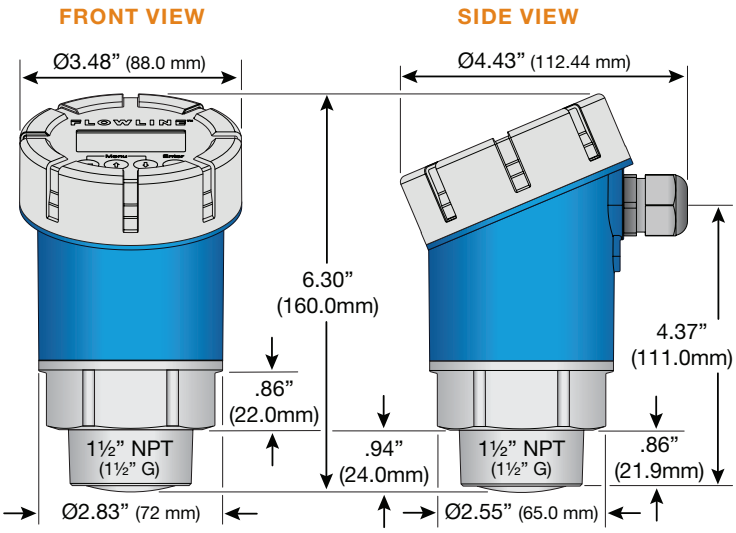



LM50-3S31



LM50-3S32



LM50-3S31
SS bracket

Ordering

LR83 - ☐ 3 ☐ ☐

CLASSIFICATION (1)

- **0** General Purpose
- **1** Intrinsically Safe

PROCESS MOUNT (2)

- **0** 1 1/2” NPT
- **1** 1 1/2” G with Viton Gasket

SIGNAL OUTPUT

- **0** 4-20 mA with HART
- **1** Modbus

NOTES

1) The intrinsically safe model is available for liquid applications with a 4-20 mA with HART signal output only. Order the LB12-1001 intrinsic safety barrier to complete your hazardous solution.
2) If PVDF is not compatible with application media or a different process mount is needed, go to www.flowline.com/level-fittings-enclosures for installation accessories.



LM53-1S80
SS tri-clamp
adapter



LM53-2440 PTFE
capped adapter
(bottom & top)