EchoBeam® LR81

80 GHz Radar Liquid and Solids Level Transmitter

FLOWLINE™ LEVEL BEST

Performance

Offered in four models, EchoBeam® is the most reliable and easy-to-use non-contact level sensor. Flowline's 80 GHz radar technology is unaffected by most media, process or environmental factors, and our intuitive LevelTap™ App makes configuration simple.

	LR80	LR81	LR83	LR85
Range:	Liquid: 32.8' (10m) Solids: 16.4' (5m)	**Liquid: 98.4' (30m) Solids: 49.2' (15m)**	Liquid: 98.4' (30m) Solids: 49.2' (15m)	Liquid: 393.7' (120m) Solids: 196.8' (60m)
Accuracy:	±5mm	**±2mm**	±2mm	±2mm
Output:	4-20 mA	**4-20 mA w/HART, Modbus or SDI-12**	4-20 mA w/HART or Modbus	4-20 mA w/HART or Modbus
Class.:	GP	**GP, IS or DP**	GP or IS	GP or IS
Max Temp.:	60° C.	**80° C.**	100° C.	120° C.
Termination:	Cable	**Cable**	Conduit	Conduit
Application:	Basic	**Challenging**	Challenging	Extreme



LM50-3S31
SS bracket

Offered with 32.8' (10m) PVC cable and a variety of fitting accessories.



Available with vertical and horizontal cable orientation.

Application

The LR81 general purpose, intrinsically safe or dust protection 80 GHz radar sensor provides continuous level measurement up to 98.4' (30m) for liquids or 49.2' (15m) for solids, with a 4-20 mA with HART, Modbus or SDI-12 signal output. The sensor is wirelessly configured over Bluetooth via our LevelTap™ App which enables you to see the level, verify the status, and manage the settings of connected sensors from the safety of the ground or nearby catwalk. The sensor measures liquid and solids media with a dielectric constant value ≥ 1.6, such as water, chemical or petroleum-based liquids, and pellet, grain, powder or aggregate solids. Select this sensor for tank, sump, lift station, weir, canal, reservoir, silo, bin, conveyor, transfer station or stockpile applications.



IP68 PVDF enclosure for corrosive liquid and solid applications.

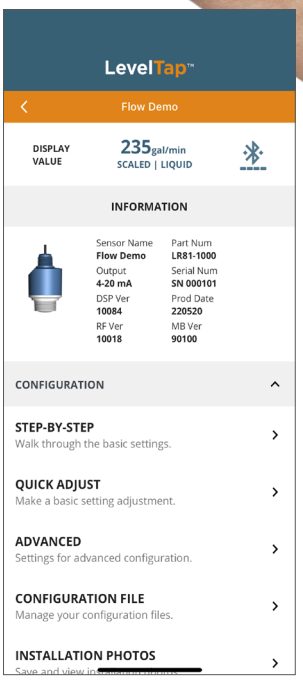

Features

- 80 GHz technology provides reliable, maintenance-free operation
- Measures level height, air gap, tank volume or open channel flow
- Rugged PVDF antenna and enclosure for corrosive liquid or solids
- IP68 rated sensor for harsh outdoor or below grade installations
- Sealed 10m PVC jacketed cable for corrosive level environments
- Zero dead band maximizes the potential fill capacity of small tanks
- Optionally measures through top wall of plastic or fiberglass tanks
- Configuration via LevelTap™ App, HART communicator or Modbus
- Low 9V or 12V operation is ideal for battery powered systems

Configuration

Download the free LevelTap™ App at the Apple Store or Google Play, register and go to Demo Sensors. There you can view level status and step-by-step or advanced configuration examples prior to sensor purchase.

© 2026 Flowline | 10500 Humbolt Street, Los Alamitos, CA 90720 USA **p** 562.598.3015 **f** 562.431.8507 **w** flowline.com **DS310270 REV B**

EchoBeam® LR81

80 GHz Radar Liquid and Solids Level Transmitter

FLOWLINE™ LEVEL BEST

Specifications

Maximum range: Liquid: 98.4’ (30m) with media dielectric ≥ 10 and no agitation
Solids: 49.2’ (15m) with media dielectric ≥ 6 and no dust
Frequency: 80 GHz., W-band, FMCW
Accuracy: 0.4m to 30m: ± 2mm
0.00m to 0.39m: ± 10mm
Dead band: 0” (0mm)
Beam angle: 8°
Min. dielectric: ≥ 1.6
Bluetooth version: Bluetooth 5.0
Bluetooth range: 26.2’ (8m)
Configuration: LevelTap™ App (IOS & Android)
Memory: Non-volatile
Signal output: _ _ _ 0: 4-20 mA, two-wire, HART 7
0 _ _ 1: Modbus, RS485, 9600 baud
0 0 _ 2: SDI-12
Max. signal dist.: _ _ _ 0: 1,000’ (304m)
0 _ _ 1: 3,937’ (1200m)
0 0 _ 2: 2,000’ (609m) divided by number of sensors on the network
Signal fail-safe: Selectable high, low or hold last value
Supply voltage: _ _ _ 0: 12-30 VDC
0 _ _ 1: 9-27 VDC
0 0 _ 2: 9-30 VDC
Max. consumption: _ _ _ 0: 22.5 mA
0 _ _ 1 & 2: 1.5 watt
Process temp.: F: -40° to 176°
C: -40° to 80°
Temp. comp.: Automatic
Storage temp.: F: -40° to 176°
C: -40° to 80°
Pressure: -14.5 to 43.5 psi (-1 to 3 bar)
Enclosure rating: Type 6P (IP68)
Encl. material: PVDF (pigmented polyvinylidene fluoride)
Antenna material: PVDF (natural polyvinylidene fluoride)
Cable jacket mat.: PVC (polyvinyl chloride)
Cable seal mat.: Viton GLT (fluoroelastomer)
Cable orientation: Vertical or horizontal
Shielded cable: _ _ _ 0: 2-conductor
0 _ _ 1: 4-conductor
0 0 _ 2: 3-conductor
Cable length: 32.8’ (10m)
Conduit connect.: _ _ 0 _: 1” NPT
_ _ 1 _: 1” G

Process mount: _ _ 0 _: 1 1/2” NPT
_ _ 1 _: 1 1/2” G
Mount gasket: _ _ 0 _: N/a
0 _ 1 _: Viton GLT (fluoroelastomer)
Classification: 0 _ _ 0/1/2: General purpose, cCSAus
1 _ _ 0: Intrinsically safe, cCSAus, ATEX, IECEx
2 _ _ 0: Dust Protection, ATEX, IECEx
Approvals: 0 _ _ _: C22.2 No. 61010-1-12
1 _ _ 0: Class I, Division 1, Groups A,B,C,D T6...T5
Class I, Zone 0, AEx ia IIC T6...T5 Ga
Ex ia IIC T6...T5 Ga
II 1G Ex ia IIC T6...T5 Ga
Ex ta IIIC T_{200}106°C Da
2 _ _ 0: II 1D Ex ta IIIC T_{200}106°C Da IP66/67
Entity parameters: 0 _ _ _: N/a
1 _ _ 0: Install per control drawing #8X-CONWIRE
2 _ _ 0: N/a
Compliance: FCC: Part 15.256, 15.209, 15C
ISED IC: RSS-102, RSS-211, RSS-247
UKCA RER 2017: 6(1)(a), 6(1)(b), 6(2)
CE/RED 2014/53/EU: EN 302 372, EN 302 729, EN 301 489-1, -33, EN 300 328
SRRC: (No. [2002] 353)
RoHS, REACH, CRN, conflict minerals

Dimensions

VERTICAL CABLE

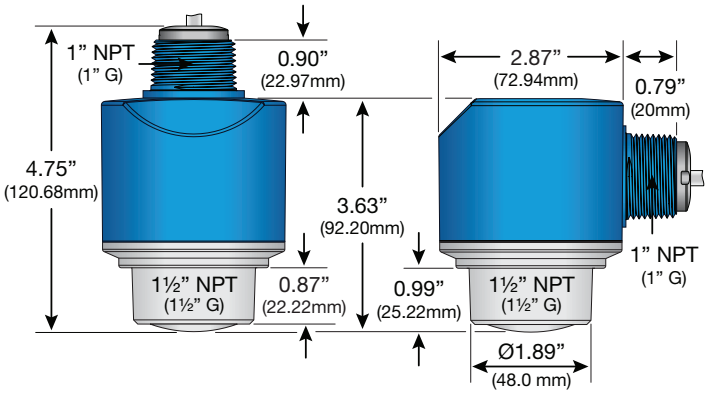

HORIZONTAL CABLE

Ordering

LR81 - ☐ ☐ ☐ ☐

CLASSIFICATION (1)(2)
- **0** General Purpose
- **1** Intrinsically Safe
- **2** Dust Protection

CABLE ORIENTATION
- **0** Vertical
- **1** Horizontal

PROCESS MOUNT (3)
- **0** 1 1/2” NPT
- **1** 1 1/2” G with Viton Gasket

SIGNAL OUTPUT (4)
- **0** 4-20 mA with HART
- **1** Modbus
- **2** SDI-12 (See note 4)

NOTES

1) The intrinsically safe model is available for liquid applications with a 4-20 mA with HART signal output only. Order the LB12-1001 intrinsic safety barrier to complete your hazardous solution.
2) For solids applications, the dust protection model is only available with a 4-20mA with HART output.
3) If PVDF is not compatible with application media or a different process mount is needed, go to www.flowline.com/level-fittings-enclosures for installation accessories.
4) The SDI-12 signal output is available with a vertical cable orientation only and either process mount.



DataView™
LI55
Controller



DataLoop™
LI23-24
Indicators