EchoBeam®

80 GHz Radar Liquid & Solid Level Transmitter

FLOWLINE™
LEVEL BEST

LR80, LR81, LR83 & LR85 Series Manual



©2025 Flowline, Inc.
All Rights Reserved

Table of Contents

Section One | Introduction 6
- Sensor Models 6
- Operating Principle 7
- Features 7
- Benefits 7
- Limitations 7
- Specifications 8
- Accuracy Tables 11
- Dimensions 16
- Safety Precautions 21

Section Two | Getting Started 24
- Setup Overview 24
- Using the LevelTap™ App 25
- Starting the LevelTap™ App 25
- Connecting EchoBeam® to the LevelTap™ App 26
- LevelTap™ Sensor Information 27
- Basic Requirements 28
- Part Number 28

Section Three | Measure the Tank 31
- Basic Tank Dimensions 31
- Cone Bottom Tanks 32
- Top of Tank Considerations 33
- Sensor Output to Local Display/Controller 33

Section Four | Install the Transmitter 34
- Installation Requirements 34
- Radio Compliance 34
- Mounting Considerations 36
- Beam Angle 40
- Reading Through Plastic & Fiberglass Tanks 41
- Bypass Installation 42
- Standpipe Installation 43
- Weir Installation 44
- Flume Installation 45

Table of Contents

TABLE OF CONTENTS (CONTINUED)

Section Five | Wire the Transmitter 46
- 4-20mA Wiring 46
- Wiring to Displays, Controllers & PLCs (General Purpose) 48
- HART Loop Powered Output 52
- MODBUS / RS485 Wiring 53
- SDI-12 Wiring 54

Section Six | Configuration Using LevelTap™ App 55
- Downloading the LevelTap™ App 55
- Connecting EchoBeam® to the LevelTap™ App 55
- Bluetooth Connection 56
- Using the LevelTap™ App 56
- Measure the Tank (Basic Dimensions) 57
- Confirm the Tank Measurements 57
- Step-by-Step Configuration 58
  - Step 1 – Basic Settings 58
  - Step 2 – Set the Sensor Height (4mA) 58
  - Step 3 – Set the Fill-Height (20mA) 59
  - Step 4 – Set the Display Value 59
  - Step 5 – Check the EchoCurve 60

Section Seven | Quick Adjust 67

Section Eight | Advanced Configuration 68
- Process Adjustments Overview 69
- Advanced Settings 69
  - Range Adjust 69
  - HART Output 72
  - Modbus Output 73
  - SDI-12 Output 74
  - Level Variables 75
  - Signal Properties 77
- Volumetric Level 81
  - Tank Properties 82
  - Volumetric Adjustments & Output at Fill-Height 83
  - Strapping Table 84
  - How Tank Shape Effects Tank Volume 85
- Flume Flow 86
- Weir Flow 89

Table of Contents

TABLE OF CONTENTS (CONTINUED)

Section Nine | Configuration File 92
- Save 92
- Load 92
- Import 92
- Export 92

Section Ten | Configuration Photos 93
- Upload Photos 93
- Previous Photos 93

Section Eleven | Diagnostics 94
- EchoCurve Diagnostics 94
- What is a Good EchoCurve? 95
- What is a Bad EchoCurve? 95
- False EchoCurve 97
- Simulation 98
- Sensor Status 98

Section Twelve | Data Sampling 99
- Setup and Enable 99
- Distance Data 101
- EchoCurve Data 101
- Export Data 102

Section Thirteen | Security 103
- Write Protect 103
- Factory Reset 104

Section Fourteen | Troubleshooting 105
- Troubleshooting Overview 105
- Error Codes 106
  - 4-20mA/HART with Display 106
  - Modbus 106
  - SDI-12 107

Table of Contents

TABLE OF CONTENTS (CONTINUED)

Section Fifteen | Appendix 108

Navigation Menu 108

Sensors 109

Configurations 109

Installation Photos 110

Documentation 110

Technical Support 111

About LevelTap 112

About Flowline 112

Account 113

General 114

Privacy 114

Security 114

Notifications 115

Help 115

Log Out 116

Factory Settings 117

User Configuration 117

LR80 Maximum Liquid Range Deration 118

LR81 Maximum Liquid Range Deration 119

LR83 Maximum Liquid Range Deration 120

LR85 Maximum Liquid Range Deration 121

Modbus Output Definitions 122

SDI-12 Output Definitions 124

Section Sixteen | Warranty, Returns and Limitations 126

Warranty 126

SENSOR MODELS

Offered in four different models, EchoBeam® is an FMCW radar level sensor that provides a continuous output proportional to the liquid or solids level in a tank or sump. Available outputs include 4-20mA, 4-20mA w/ HART, Modbus RTU and SDI-12. Make sure that the model purchased is appropriate for your application.

Series	Max Range Liquid	Max Range Solids	Beam Angle	Material	Mounting	Application
LR80	32.81’ (10m)	16.40’ (5m)	8°	PVDF	1½” NPT (1½” G)	**Liquids:** Measures standard tank, pump station or reservoir level up to 10m, or open channel flow. **Solids:** Measures small silos, open containers and stockpiles up to 5m, or transfer stations and conveyors.
LR81	98.42’ (30m)	49.21’ (15m)	8°	PVDF	1½” NPT (1½” G)	**Liquids:** Measures standard tank, pump station or reservoir level up to 30m, or open channel flow. **Solids:** Measures small silos, open containers and stockpiles up to 7.5m, or transfer stations and conveyors.
LR83	98.42’ (30m)	49.21’ (15m)	6°	PVDF	1½” NPT (1½” G)	**Liquids:** Measures large bulk storage tanks up to 30m or difficult process tank applications or open channel flow. **Solids:** Measures small to medium silos or stockpiles up to 15m.
LR85	393.7’ (120m)	198.8’ (60m)	4°	PFA	3” NPT (M80 x 3) or Gimbaled 3” ANSI (DN80)	**Liquids:** Measures large bulk storage tanks up to 120m or difficult process tank applications. **Solids:** Measures medium to large silos up to 60m, including those with significant dust or very limited measurement space.

OPERATING PRINCIPLE

Flowline's EchoBeam is frequency modulated continuous wave (FMCW) radar that operates at 80 GHz normally. The antenna transmits high frequency as well as the frequency modulated radar signal. The frequency of the radar signal linearly increases. The transmitter radar signal is reflected by the dielectric of the liquid and/or solid to be measured and received by antenna. At the same time, the difference between the frequency of transmitter signal and that of the received signal is proportional to the measured distance. Therefore, the distance is calculated by the spectrum derived from the analog-to-digital conversion frequency difference and the Fast Fourier Transform (FFT).

FEATURES

- High frequency, small beam angle and smaller dead zone enable measurement in small diameter tanks of both metallic and non-metallic construction.
- Centralized energy and stronger anti-jamming capability that has significantly improved measurement accuracy and reliability.
- Small antenna size that facilitates the installation in smaller tanks.

BENEFITS

- 80GHz radar can achieve small beam angles with smaller diameter antennas allowing for greater avoidance of obstacles within an application.
    - Avoiding mixer blades, pipes, ladder rungs, conduit, chains or anything else you can find in a tank or sump is easier with a narrow beam angle.
- Easy to retrofit other technologies with the smaller antenna and packaging.
- Use of thermo-plastics to construct a transmitter compatible with corrosive materials, thus avoiding the typical radar issue of 316 SS compatibility.

LIMITATIONS (FACTORS THAT COULD INFLUENCE PERFORMANCE)

- Air particulates with a high dielectric constant value such as lead or ferroalloy.
- Highly dense air particulates that attenuate microwave emission and receipt.
- Material build-up on the antenna that degrades microwave emission and receipt.
- Liquids or solids media that possess an extremely low dielectric constant value with little reflectivity.

SPECIFICATIONS

Measurement Range:
- LR80 Max. range liquids: 32.81 feet (10m) with media dielectric ≥1.6 and no agitation*
- LR80 Max. range solids: 16.40 feet (5m) with media dielectric ≥ 6 and no dust**
- LR81 Max. range liquids: 98.42 feet (30m) with media dielectric ≥10 and no agitation*
- LR81 Max. range solids: 49.21 feet (15m) with media dielectric ≥ 6 and no dust**
- LR83 Max. range liquids: 98.42 feet (30m) with media dielectric ≥10 and no agitation*
- LR83 Max. range solids: 49.21 feet (15m) with media dielectric ≥ 6 and no dust**
- LR85 Max. range liquids: 393.7 feet (120m) with media dielectric ≥10 and no agitation*
- LR85 Max. range solids: 198.8 feet (60m) with media dielectric ≥ 6 and no dust**
- ** Refer to Maximum Liquid Range Deration in Appendix (Section Fifteen)*
- *** For dielectric values under 6 and as low as 1.6, multiply max. range for solids by 0.75*

Frequency:	80 GHz., W-band, FMCW
Measurement Accuracy:	
LR80:	0.40 m to 30 m: ±5mm*
	0.00 m to 0.39 m: ±10mm
LR81, LR83, LR85:	0.40 m to 30 m: ±2mm*
	0.00 m to 0.39 m: ±10mm
** Refer to Accuracy Tables at end of Specifications (Section One)*	
Dead Band:	0” (0mm) / Factory Set
Beam Angle:	LR80: 8°
	LR81: 8°
	LR83: 6°
	LR85: 4°
Min. Dielectric:	≥ 1.6
Measure Cycle Time:	1000 ms
Bluetooth Version:	Bluetooth 5.0
Bluetooth Range:	26.2’ (8m) *direct line of sight without obstructions
Configuration:	LR80 / LR81: LevelTap™ App (IOS & Android)
	LR83 / LR85: LevelTap™ App (IOS & Android) or push button
Memory:	Non-volatile
Display Type:	LCD, 6-digit (LR83 & LR85 only)
Signal Output:	LR80: 4-20mA
	LR81: 4-20mA & HART 7, Modbus or SDI-12
	LR83: 4-20mA & HART 7 or Modbus
	LR85: 4-20mA & HART 7 or Modbus
Max. Signal Distance:	
4-20mA (HART):	1,000’ (304m)
Modbus:	3,937’ (1200m)
SDI-12:	2,000’ (609m) divided by number of sensors on the network
Signal Fail-Safe:	Selectable, high, low or hold last value
Supply Voltage:	
4-20mA (HART):	12 to 30 VDC
Modbus:	9 to 27 VDC
SDI-12:	9 to 30 VDC

Max. Consumption:
- 4-20mA (HART): 22.5 mA
- Modbus & SDI-12: 1.5 watt

Process Temperature:
LR80: F: -40° to 140° C: -40° to 60°
LR81: F: -40° to 176° C: -40° to 80°
LR83: F: -40° to 212° C: -40° to 100°
LR85: F: -40° to 248° C: -40° to 120°

Temperature Compensation: Automatic

Storage Temperature:
F: -40° to 176°
C: -40° to 80°

Pressure:
LR80: -14.5 to 43.5 psi (-1 to 3 bar)
LR81: -14.5 to 43.5 psi (-1 to 3 bar)
LR83: -14.5 to 43.5 psi (-1 to 3 bar)
LR85: -14.5 to 43.5 psi (-1 to 3 bar) – Threaded version only
Ambient – Flange version only

Enclosure Rating:
LR80 / LR81: Type 6P (IP68)
LR83 / LR85: Type 4X (IP66/67)

Enclosure Material Wetted:
- Antenna:
  LR80: PVDF (natural polyvinylidene fluoride)
  LR81: PVDF (natural polyvinylidene fluoride)
  LR83: PVDF (natural polyvinylidene fluoride)
  LR85: PFA (Perfluoroalkoxy)
- Process Seal: Viton GLT (fluoroelastomer)

Non-Wetted Materials:

Series	LR80	LR81	LR83	LR85
Enclosure material	PVDF		PBT-FR	
Encl. cap material	N/A		PC (clear polycarbonate)	
Cable jacket material	PVC		N/A	
Cable seal material	Viton GLT		N/A	
Cable length	32.8’		N/A	
Cable gland	N/A		Nylon PA	

Wire Interface: Shielded cable

Series	LR80	LR81	LR83	LR85
4-20mA & HART 7	2-conductor	2-conductor	2-pole terminal	2-pole terminal
Modbus	N/A	4-conductor	4-pole terminal	4-pole terminal
SDI-12	N/A	3-conductor	N/A	N/A

Cable Length: 32.8’ (10m), LR80 & LR81 series

Conduit Connection:
LR80 / LR81: 1” MNPT (1” G)
LR83 / LR85: ½” FNPT (M20)

Process Mount:	LR80: 1½” NPT (1½” G) LR81: 1½” NPT (1½” G) LR83: 1½” NPT (1½” G) LR85: 3” ANSI (DN80 PN6) gimbal flange 3” NPT (M80 x 3) threaded version
Mounting Gasket:	Viton GLT (required with 1½” G and M80 x 3 versions only)
Air Purge Connector:	¼” tube compression fitting (LR85 series only)
Classification:	
General Purpose:	$_{c}CSA_{us}$
Intrinsically Safe:	$_{c}CSA_{us}$, ATEX, IECEx
Dust Proof by Encl.:	ATEX, IECEx
Approvals:	
General Purpose:	$_{c}CSA_{us}$ (UL 61010-1 :2012 - 3rd Ed & CAN/CSA-C22.2 No. 61010-1-12)
Intrinsically Safe:	$_{c}CSA_{us}$ (ANSI/UL 60079-0-2020 7th Ed & ANSI/UL 60079-11-2018 6th Ed) $_{c}CSA_{us}$ (UL 913-2019 8th Ed) $_{c}CSA_{us}$ (CSA C22.2 No. 60079-0:19 & CAN/CSA C22.2 No. 60079-11:14) ATEX (EN IEC 60079-0:2018 & EN IEC 60079-11:2012) IECEx (IEC 60079-0:2017 Ed: 7.0 & IEC 60079-11:2011 Ed: 6.0 & IEC 60529)
Dust Proof by Encl.:	ATEX (EN IEC 60079-0:2018 & EN IEC 60079-31:2014) IECEx (IEC 60079-0:2017 Ed: 7.0 & IEC 60079-31:2022 Ed: 3.0)
Compliance:	FCC: Part 15.256, 15.209, 15C ISED IC:RSS-102, RSS-211, RSS-247 UKCA RER 2017: 6(1)(1), 6(1)(b), 6(2) CE/RED 2014/53/UE: EN302 372, EN 302 729, EN 301 489-1, -33, EN 300 328 SRRC (No. [2002] 353) RoHS, REACH, CRN, conflict minerals
Weight:	Depends on process connection size and housing LR80: 2.25 lbs. (1.02 kg) LR81: 2.25 lbs. (1.02 kg) LR83: 1.50 lbs. (0.68 kg) LR85: 2.5 lbs. (1.13 kg) 7.0 lbs. (3.17 kg)

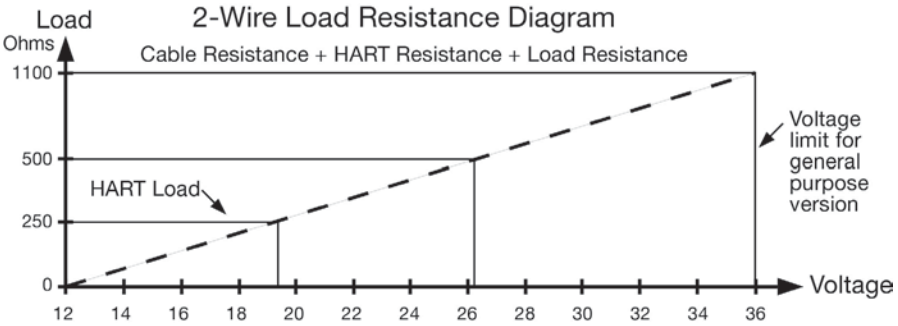

ACCURACY TABLES

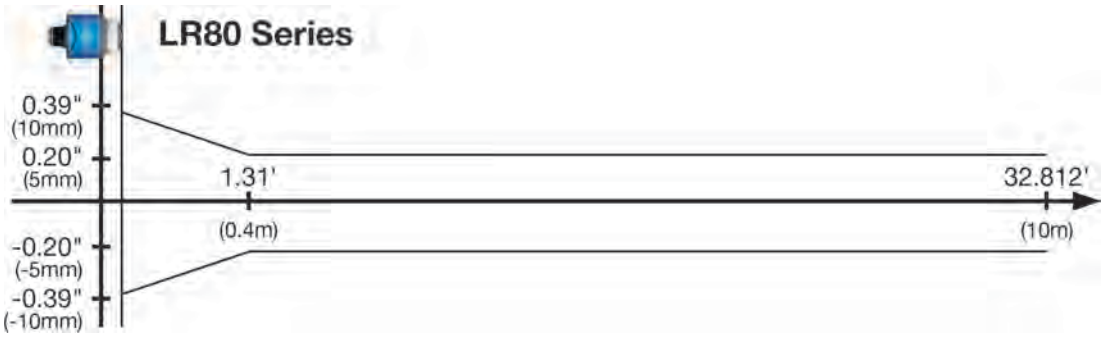

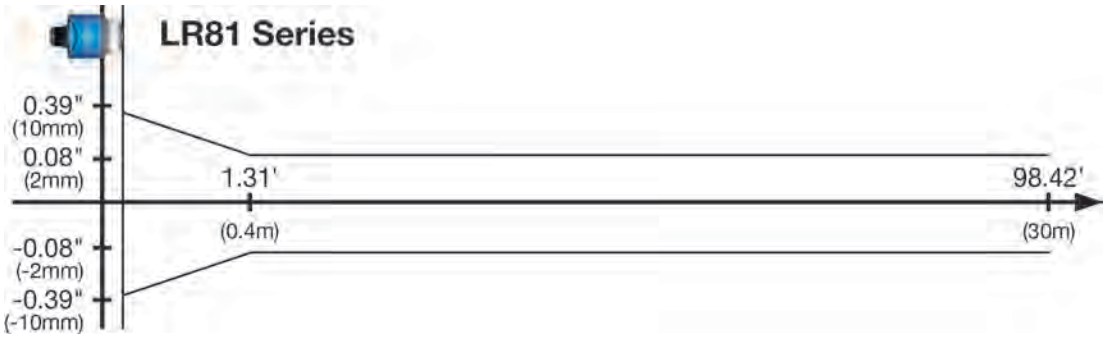

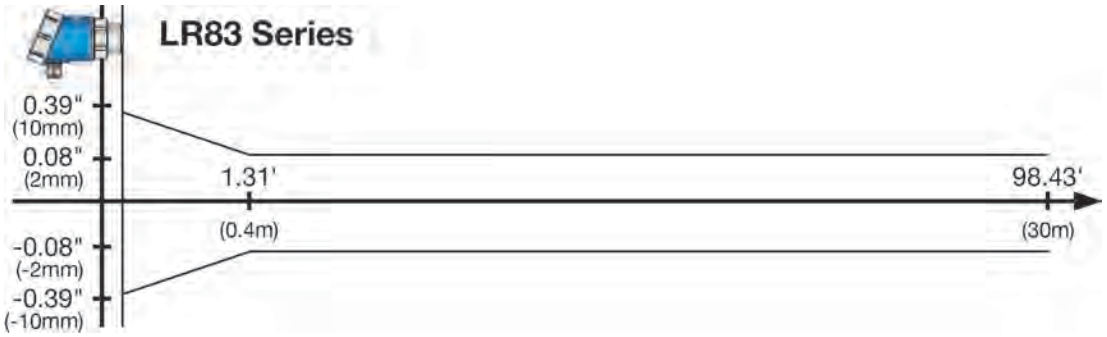

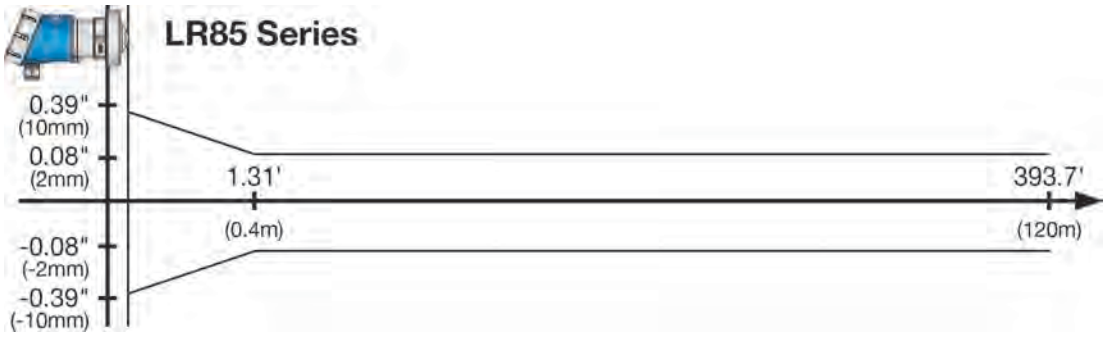

INTRINSICALLY SAFE CONTROL DRAWING 8X-CONWIRE (LR81 ONLY):

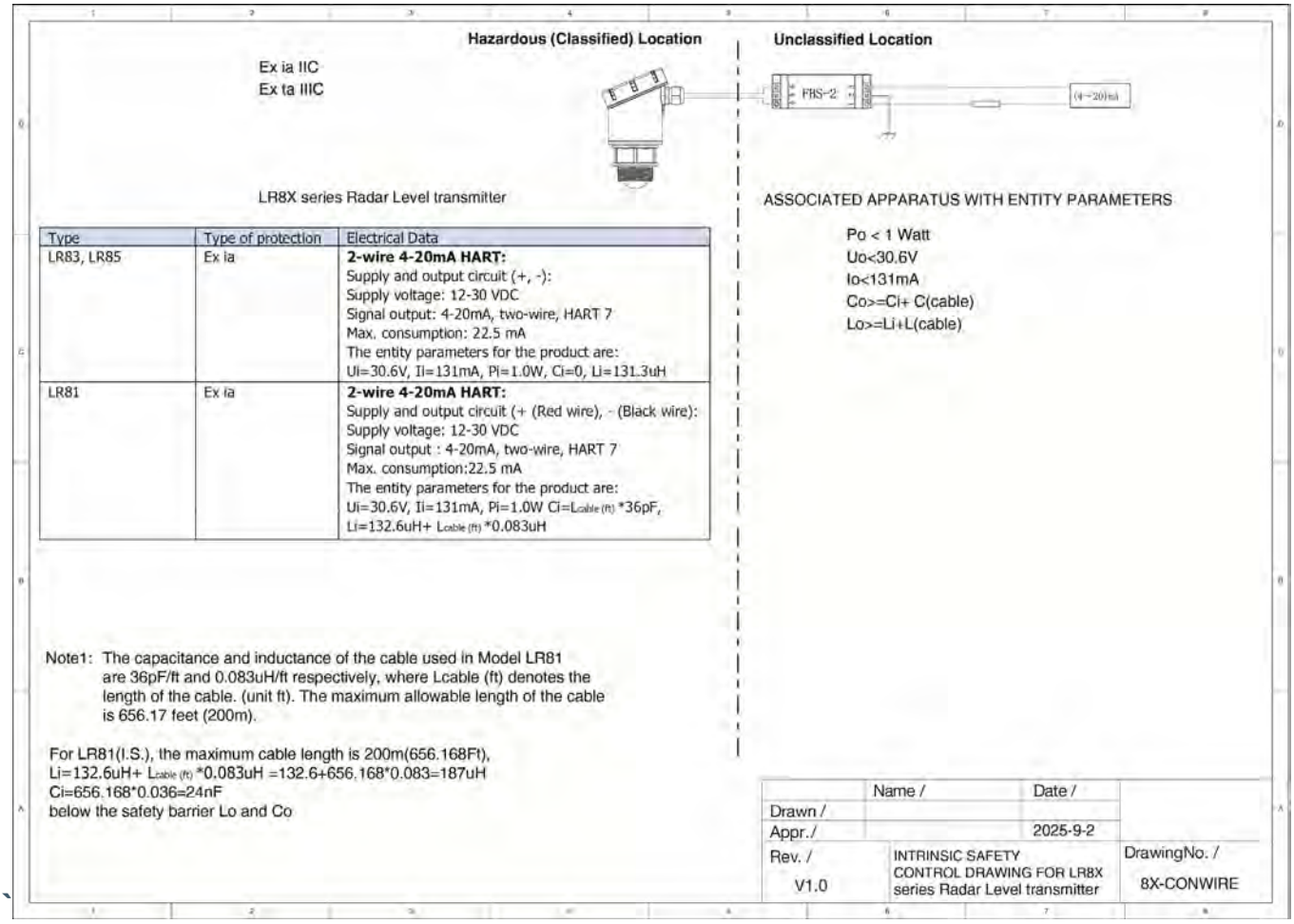

Intrinsically Safe Approvals:

Intrinsic Safe:

North America:	Class I, Division 1, Groups A, B, C, D; (T6…T5)
($_{c}$CSA$_{us}$)	Ex ia IIC; (T6…T5) Ga
	Class I, Zone 0, AEx ia IIC; (T6…T5) Ga
ATEX:	II 1G Ex ia IIC T6/T5 Ga;
IECEx:	Ex ia IIC T6/T5 Ga;
General:	CE, RoHS

Intrinsically Safe Entity Parameters:

U_i = 30.6 V; I_i = 131 mA; P_i = 1.0 W; $C_i = 0 + L_{cable(ft)} * 36pF/ft$; $L_i = 132.6\ \mu H + L_{cable(ft)} \times 0.083\ \mu H/ft$

Note1: The capacitance and inductance of the cable used in model LR81-1_ _0 are 36pF/ft and 0.083µH/ft respectively, where $L_{cable\ (ft)}$ denotes the length of the cable. (unit ft). The maximum allowable length of the cable is 656.17 feet (200m).

INTRINSICALLY SAFE CONTROL DRAWING 8X-CONWIRE (LR83 AND LR85 SERIES ONLY):

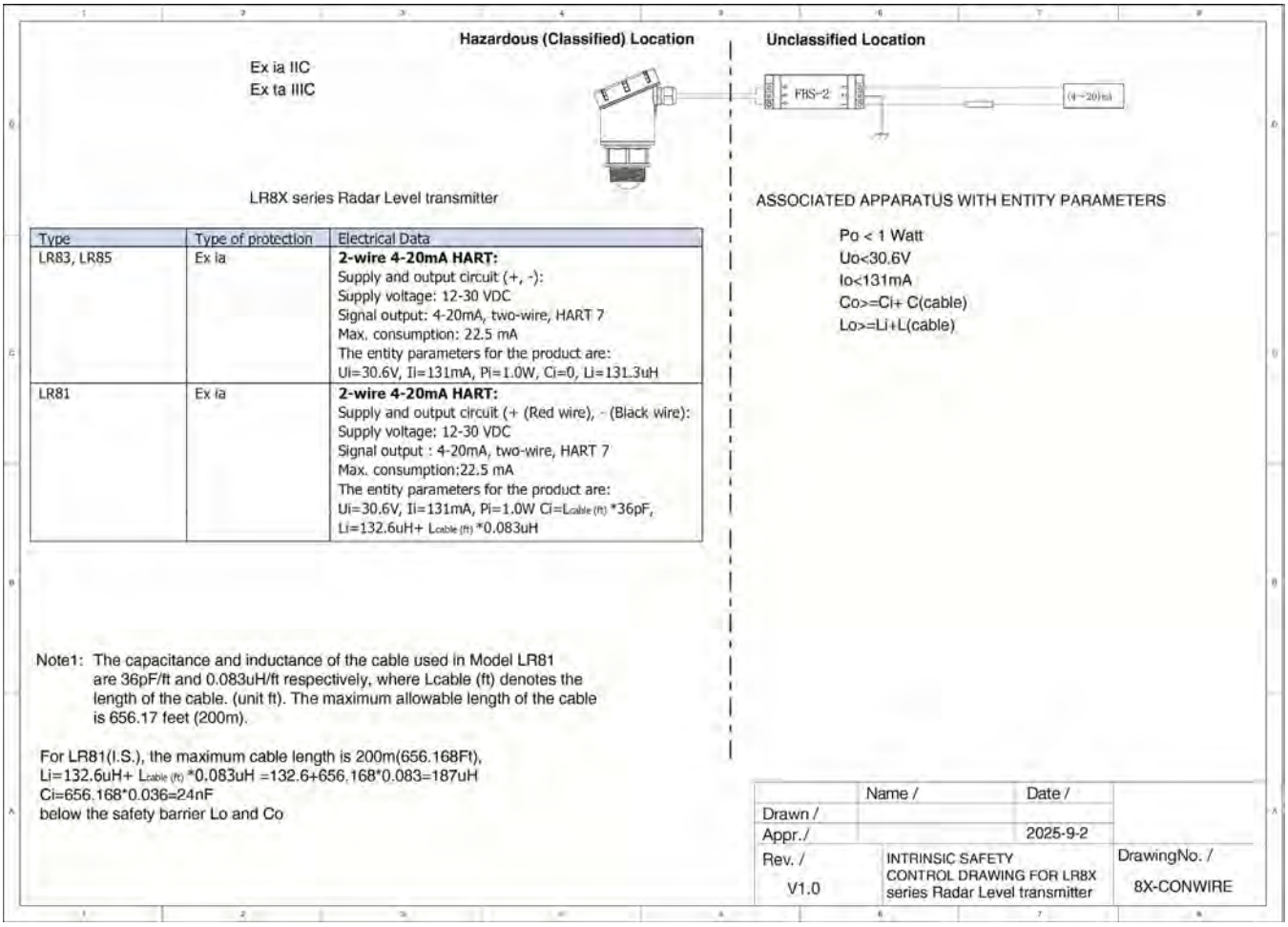

Hazardous (Classified) Location

Ex ia IIC
Ex ta IIIC

LR8X series Radar Level transmitter

Unclassified Location

FHS-2

(4~20)mA

ASSOCIATED APPARATUS WITH ENTITY PARAMETERS

Po < 1 Watt
Uo<30.6V
Io<131mA
Co>=Ci+ C(cable)
Lo>=Li+L(cable)

Type	Type of protection	Electrical Data
LR83, LR85	Ex ia	**2-wire 4-20mA HART:** Supply and output circuit (+, -): Supply voltage: 12-30 VDC Signal output: 4-20mA, two-wire, HART 7 Max. consumption: 22.5 mA The entity parameters for the product are: Ui=30.6V, Ii=131mA, Pi=1.0W, Ci=0, Li=131.3uH
LR81	Ex ia	**2-wire 4-20mA HART:** Supply and output circuit (+ (Red wire), - (Black wire): Supply voltage: 12-30 VDC Signal output : 4-20mA, two-wire, HART 7 Max. consumption:22.5 mA The entity parameters for the product are: Ui=30.6V, Ii=131mA, Pi=1.0W Ci=Lcable (ft) *36pF, Li=132.6uH+ Lcable (ft) *0.083uH

Note1: The capacitance and inductance of the cable used in Model LR81 are 36pF/ft and 0.083uH/ft respectively, where Lcable (ft) denotes the length of the cable. (unit ft). The maximum allowable length of the cable is 656.17 feet (200m).

For LR81(I.S.), the maximum cable length is 200m(656.168Ft),
Li=132.6uH+ Lcable (ft) *0.083uH =132.6+656.168*0.083=187uH
Ci=656.168*0.036=24nF
below the safety barrier Lo and Co

	Name /	Date /	
Drawn /			
Appr./		2025-9-2	
Rev. / V1.0	INTRINSIC SAFETY CONTROL DRAWING FOR LR8X series Radar Level transmitter		DrawingNo. / 8X-CONWIRE

Intrinsically Safe Approvals:

Intrinsic Safe:

North America:	Class I, Division 1, Groups A, B, C, D; (T*)
($_{c}CSA_{us}$)	Ex ia IIC; (T*) Ga
	Class I, Zone 0, AEx ia IIC; (T*) Ga
ATEX:	II 1G Ex ia IIC T6...T4 Ga;
IECEx:	Ex ia IIC T6...T4 Ga;
General:	CE, RoHS

Intrinsically Safe Entity Parameters:

U_i = 30.6 V; I_i = 131 mA; P_i = 1.0 W; C_i = 0; L_i = 132.6 µH

(*T) Temperature Ratings:

Type	LR83-13_0	T6...T5
T class of whole equipment	LR85-13_0	T6...T4

PROTECTION BY ENCLOSURE APPROVALS (LR81 SERIES ONLY):

Protection by Enclosure (LR81-2_ _0 & LR81-2_ _ 1 only):

ATEX: II 1D Ex ta IIIC T_{200}106°C Da IP66/67

IECEx: Ex ta IIIC T_{200}106°C Da IP66/67

ELECTRICAL DATA:

Type	Type of Protection	Electrical Data
LR81-1_ _ 0	Ex ia	Supply and output circuit [+ (Red wire), - (Black wire)]: Supply voltage: 12-30 VDC Signal output: 4-20mA, two-wire, HART Max. consumption: 22.5 mA The entity parameters for the product are: U_i = 30.6V, I_i = 131mA, P_i = 1.0W C_i = $L_{cable\ (ft)}$ *36pF/ft, L_i = 132.6µH+ $L_{cable\ (ft)}$ *0.083µH/ft
LR81-2_ _0	Ex ta	Supply and output circuit: [+ (Red wire), - (Black wire)] Supply Voltage: 12-30 VDC Signal Output: 4-20mA, two-wire, HART Max consumption: 22.5 mA @ 30V
LR81-2_ _1	Ex ta	Supply circuit: [+ (Red wire), - (Black wire)] Signal circuit: [A (White wire), B (Green wire)] Supply Voltage: 9-27 VDC Signal Output: Modbus, RS485 Max consumption: 1.5 W
LR83-13_0 LR85-13_0	Ex ia	Supply and output circuit (+, -): Supply voltage: 12-30 VDC Signal output: 4-20mA, two-wire, HART Max. consumption: 22.5 mA The entity parameters for the product are: U_i = 30.6V, I_i = 131mA, P_i = 1.0W, C_i = 0, L_i = 132.6µH

TEMPERATURE RATINGS (GAS):

The temperature ratings are depending on the model, ambient temperature and process temperature and are as listed below.

Type	T class of whole equipment	Ambient temperature range	Process temperature range
LR81-1_ _0 2-wire 4-20 mA HART	T6	-40˚C to 60 ˚C	-40˚C to 60 ˚C
	T5	-40˚C to 60 ˚C	-40˚C to 80 ˚C
LR83-13_0 2-wire 4-20 mA HART	T6	-40˚C to 60 ˚C	-40˚C to 60 ˚C
	T5	-40˚C to 60 ˚C	-40˚C to 100 ˚C
LR85-13_0 2-wire 4-20 mA HART	T6	-40˚C to 60 ˚C	-40˚C to 60 ˚C
	T5	-40˚C to 60 ˚C	-40˚C to 100 ˚C
	T4	-40˚C to 60 ˚C	-40˚C to 120 ˚C

TEMPERATURE RATINGS (DUST PROTECTION):

Temperature ratings for equipment in EPL Da (maximum surrounding dust layer when installed in Zone 20 = 200 mm).

Type	T class of whole equipment	Ambient temperature range	Process temperature range
LR81-2_ _0 & LR81-2_ _1	T98 °C	-40˚C to 50 ˚C	-40˚C to 60 ˚C
	T106 °C	-40˚C to 50 ˚C	-40˚C to 80 ˚C

DIMENSIONS

LR80 Series – Vertical Orientation

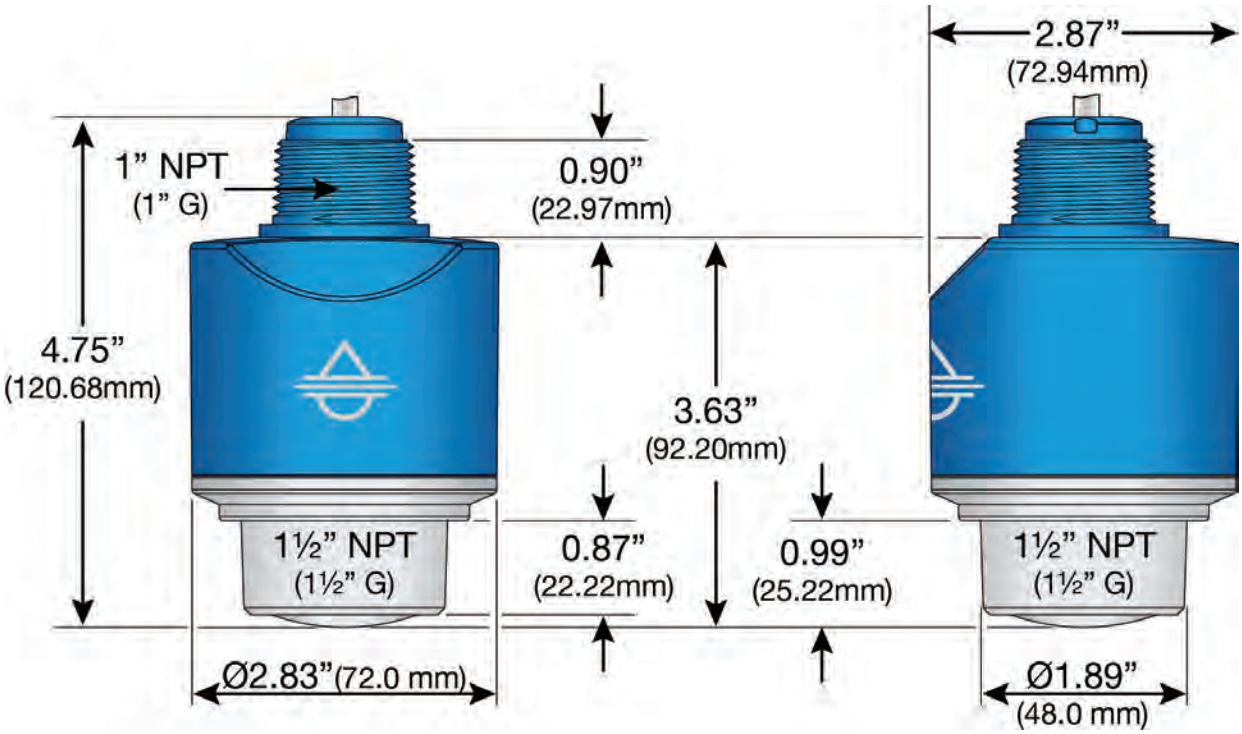

DIMENSIONS

LR81 Series – Vertical Orientation

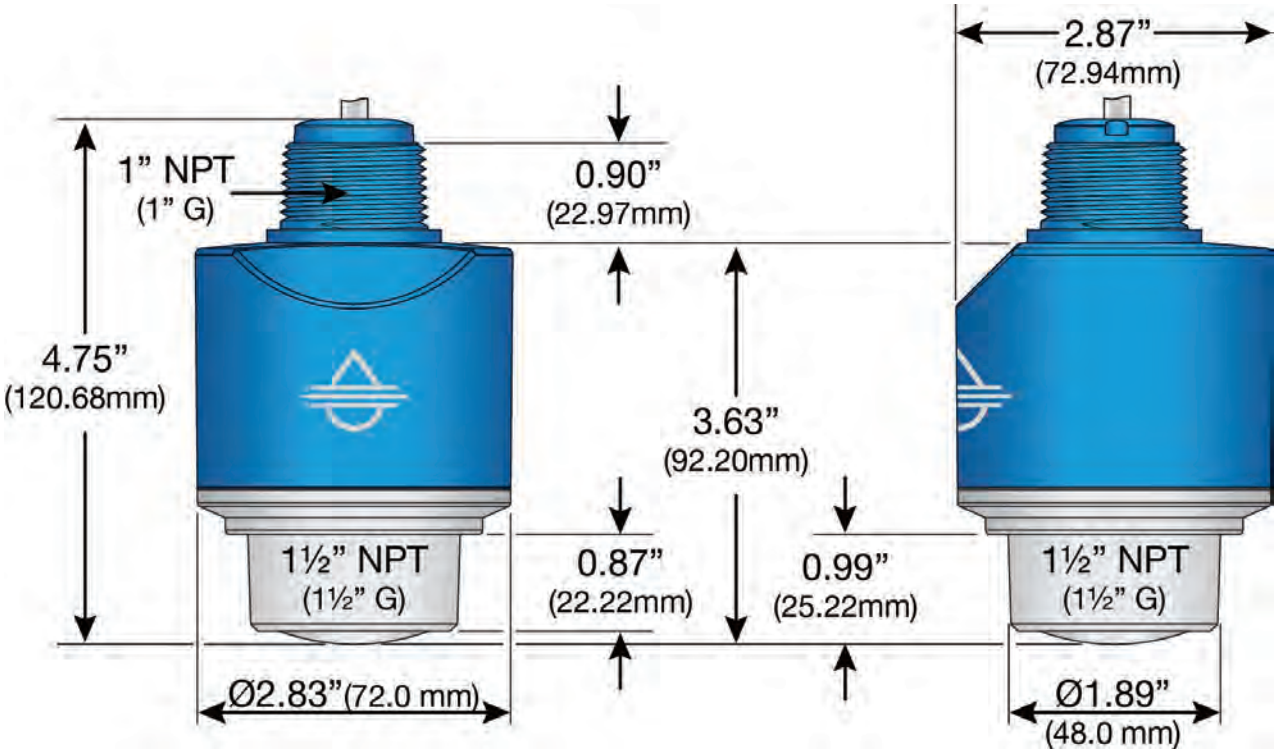

LR81 Series – Horizontal Orientation

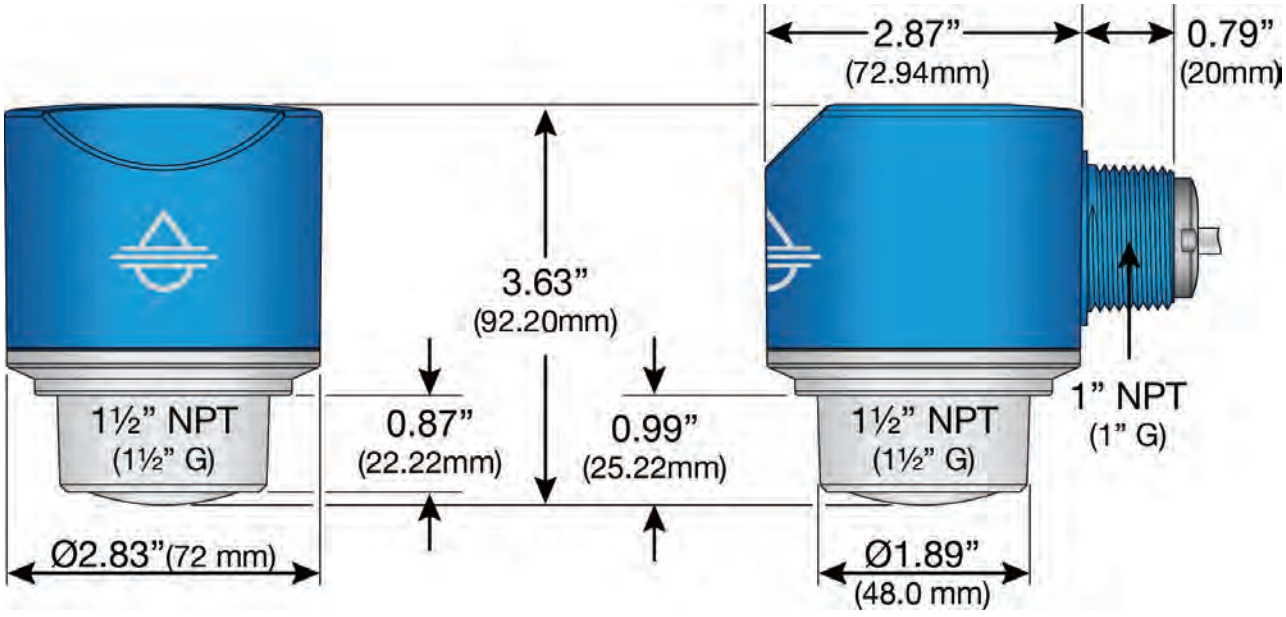

DIMENSIONS

LR83 Series

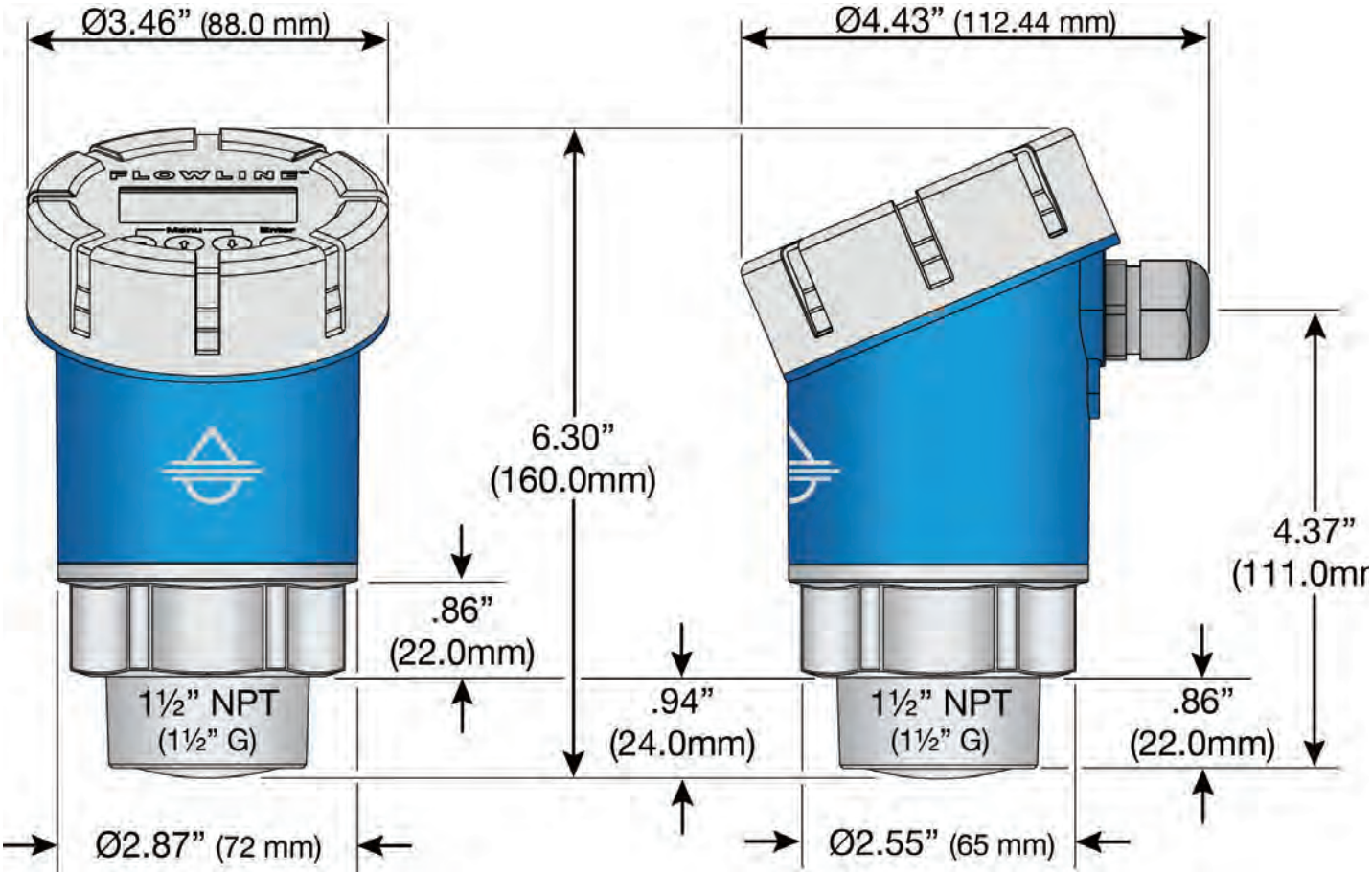

DIMENSIONS

LR85 Series (Flange Mount)

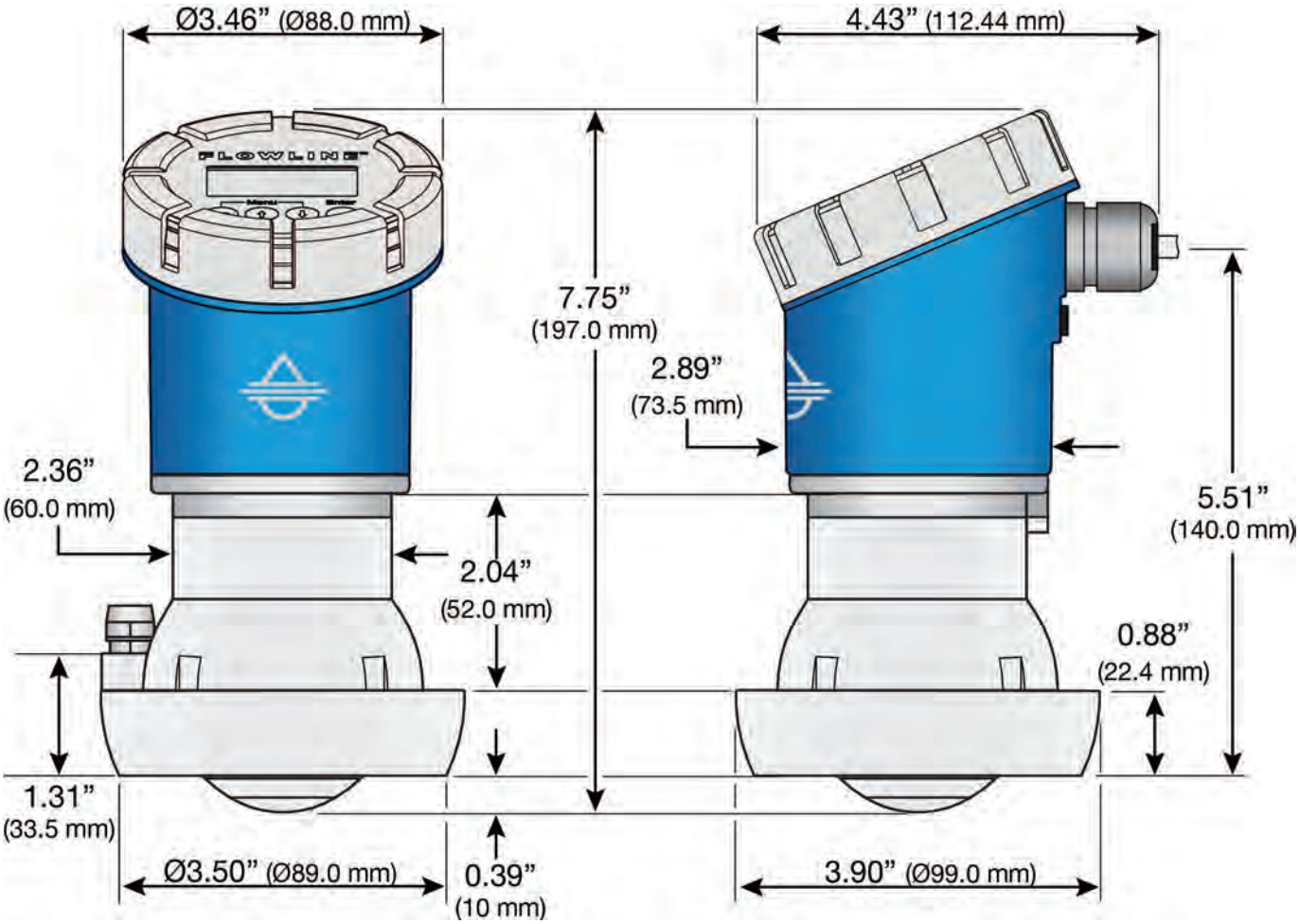

DIMENSIONS

LR85 Series (3” NPT Thread Mount)

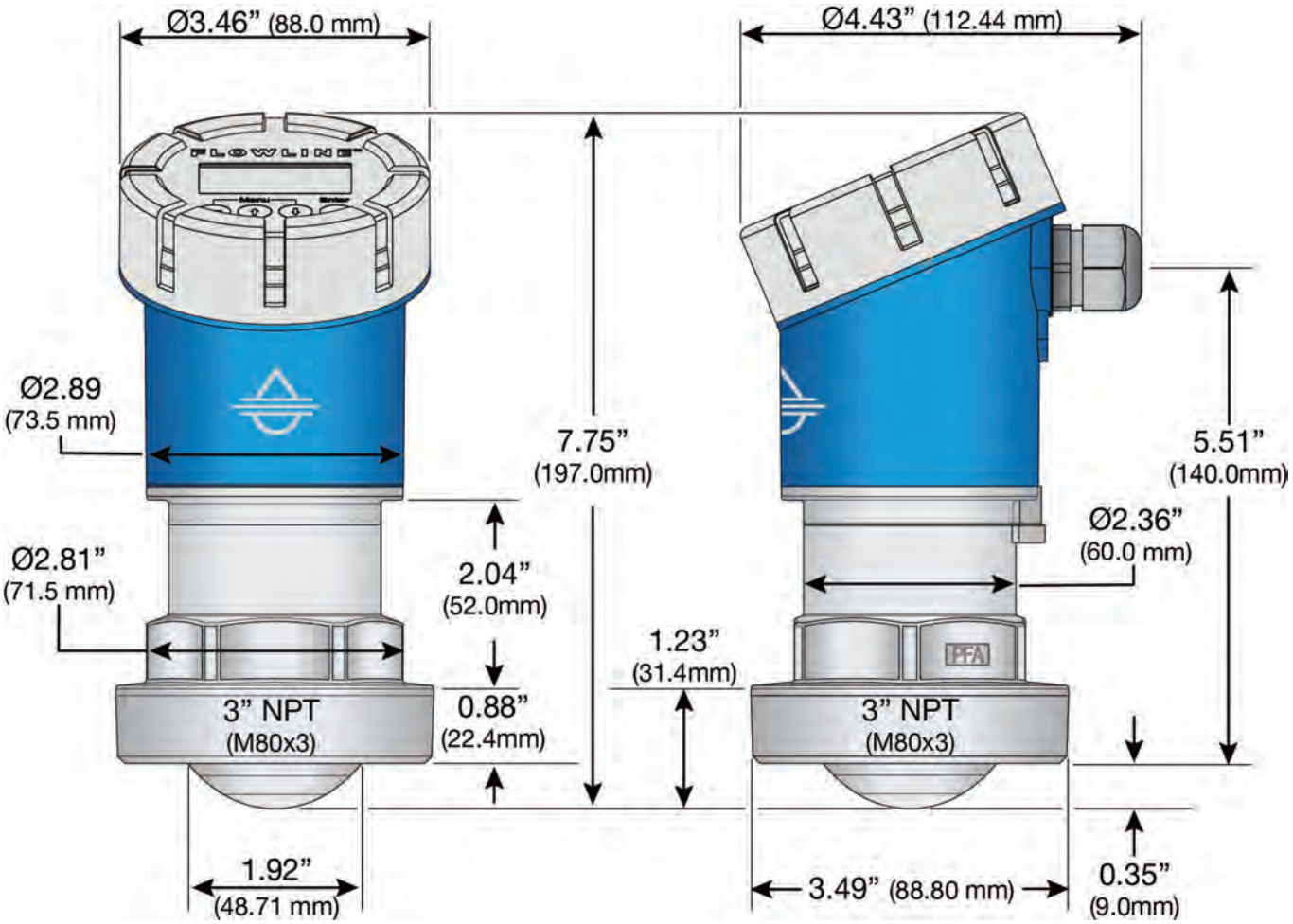

SAFETY PRECAUTIONS

About this Manual: PLEASE READ THE ENTIRE MANUAL PRIOR TO INSTALLING OR USING THIS PRODUCT. This manual includes information on the EchoBeam® Radar Level Transmitter from FLOWLINE. Please refer to the part number located on the sensor label to verify the exact model which you have purchased.

User's Responsibility for Safety: Flowline manufactures a broad range of level sensing technologies. While each of these sensors is designed to operate in a wide variety of applications, it is the user's responsibility to select a sensor model that is appropriate for the application, install it properly, perform tests of the installed system, and maintain all components. The failure to do so could result in property damage or serious injury.

Proper Installation and Handling: Only professional staff should install and/or repair this product. Never over tighten the sensor within the fitting. Always check for leaks prior to system start-up. The equipment shall not be installed in a location where the external conditions are conductive to the build-up of electrostatic charge on such surfaces. This includes but is not limited to prevent friction to the enclosure surface or by the process medium as well as exposition to high voltage fields. In addition, the equipment shall only be cleaned with a damp cloth.

Handling Static-Sensitive Circuits and Devices: When handling the instrument (part), the technician should follow the below guidelines to reduce the possibility of an electrostatic charge build-up on the technician's body from transferring to the electronic part. This should be repeated while handling the part and more frequently after sitting down from a standing position, sliding across the seat or walking a distance. DO NOT open the unit cover until it is time to work on the part. Wipe unit with a damp cloth when cleaning. **WARNING - POTENTIAL ELECTROSTATIC CHARGING HAZARD - SEE INSTRUCTIONS.**

Wiring and Electrical: A supply voltage of 12-30 VDC is used to power all EchoBeam® sensors with 4-20mA and 4-20mA w/ HART outputs. A supply voltage of 9-27 VDC is used to power all EchoBeam® sensors with Modbus output and a supply voltage of 9-30 VDC is used to power all EchoBeam® sensors with SDI-12 output. Electrical wiring of the sensor should be performed in accordance with all applicable national, state, and local codes. All cables must be effectively clamped to prevent pulling or twisting.

Cabling - LR81 Series: The LR81 shall be installed such that the supply cable is protected from mechanical damage. The cable shall not be subjected to tension or torque. If the cable is to be terminated within an explosive atmosphere, then the free end shall be terminated in a suitably certified termination facility.

Material Compatibility: The enclosure and antenna are made of Polyvinylidene Fluoride (PVDF) with a Viton GLT seal (LR81 and LR83 series) and are also made of Perfluoroalkoxy (PFA) with a Viton GLT seal (LR85 series). Make sure that the model which you have selected is chemically compatible with the application media.

Enclosure: The sensor housing is liquid-resistant but is not designed to be operational when immersed. Mount the sensor in such a way that the enclosure and antenna do not come into contact with the application media under normal operational conditions. The equipment shall be protected against excessive UV light emission. The product shall only be used in locations where there is a low risk of mechanical impact.

Make a Fail-Safe System: Design a fail-safe system that accommodates the possibility of sensor and/or power failure. FLOWLINE recommends the use of redundant back-up systems and alarms in addition to the primary system.

Flammable, Explosive or Hazardous Applications: Specific EchoBeam® models are approved for use within general purpose applications ONLY and should NOT be used within classified hazardous environments. **Other EchoBeam® are approved for use within intrinsically safe applications and are intended for use within classified hazardous environments. For intrinsically safe applications, installation must be made per drawing 8X-CONWIRE and the instruction manual.** Please refer to the part number located on the sensor label to verify the exact model which you have purchased. Installation shall be in accordance with CEC Part I or NEC as applicable.

PRÉCAUTIONS DE SÉCURITÉ

À Propos de ce Manuel: VEUILLEZ LIRE L'INTÉGRALITÉ DE CE MANUEL AVANT D'INSTALLER OU D'UTILISER CE PRODUIT. Ce manuel contient des informations sur le transmetteur de niveau radar EchoBeam® de FLOWLINE. Veuillez vous référer à la référence indiquée sur l'étiquette du capteur pour vérifier le modèle exact que vous avez acheté.

Responsabilité de l'utilisateur en matière de Sécurité: Flowline fabrique une large gamme de technologies de détection de niveau. Bien que chacun de ces capteurs soit conçu pour fonctionner dans une grande variété d'applications, il incombe à l'utilisateur de sélectionner un modèle de capteur adapté à l'application, de l'installer correctement, d'effectuer des tests du système installé et d'assurer la maintenance de tous les composants. Le non-respect de ces consignes pourrait entraîner des dommages matériels ou des blessures graves.

Installation et Manipulation Correctes: Seul un personnel qualifié est autorisé à installer et/ou réparer ce produit. Ne serrez jamais excessivement le capteur dans le raccord. Vérifiez toujours l'absence de fuites avant la mise en service du système. L'équipement ne doit pas être installé dans un endroit où les conditions extérieures favorisent l'accumulation de charges électrostatiques sur ses surfaces. Cela inclut, sans s'y limiter, d'éviter les frottements sur la surface du boîtier ou par le fluide de process, ainsi que l'exposition à des champs haute tension. De plus, l'équipement ne doit être nettoyé qu'avec un chiffon humide.

Manipulation des Circuits et Composants Sensibles à l'électricité Statique: Lors de la manipulation de l'instrument (ou du composant), le technicien doit suivre les consignes ci-dessous afin de réduire le risque de transfert de charge électrostatique de son corps vers la pièce électronique. Cette procédure doit être répétée à chaque manipulation du composant et plus fréquemment après s'être assis, s'être déplacé sur son siège ou avoir marché. N'ouvrez PAS le boîtier de l'appareil avant d'être prêt à intervenir sur le composant. Nettoyez l'appareil avec un chiffon humide. **AVERTISSEMENT - DANGER POTENTIEL DE CHARGES ÉLECTROSTATIQUES - VOIR INSTRUCTIONS.**

- **Câblage et Alimentation électrique:** Une tension d'alimentation de 12 à 30 VCC est utilisée pour alimenter tous les capteurs EchoBeam® avec sorties 4-20 mA et 4-20 mA avec HART. Une tension d'alimentation de 9 à 27 VCC est utilisée pour alimenter tous les capteurs EchoBeam® avec sortie Modbus, et une tension d'alimentation de 9 à 30 VCC est utilisée pour alimenter tous les capteurs EchoBeam® avec sortie SDI-12. Le câblage électrique du capteur doit être effectué conformément à toutes les normes nationales, régionales et locales en vigueur. Tous les câbles doivent être correctement fixés pour éviter toute traction ou torsion.
- **Câblage - Série LR81:** Le dispositif LR81 doit être installé de manière à ce que le câble d'alimentation soit protégé contre les dommages mécaniques. Le câble ne doit être soumis ni à une tension ni à une torsion. Si le câble doit être raccordé dans une atmosphère explosive, son extrémité libre doit être raccordée à un dispositif de terminaison certifié conforme.
- **Compatibilité des Matériaux:** Le boîtier et l'antenne sont fabriqués en fluorure de polyvinylidène (PVDF) avec un joint Viton GLT (séries LR81 et LR83) et également en perfluoroalkoxy (PFA) avec un joint Viton GLT (série LR85). Assurez-vous que le modèle sélectionné est chimiquement compatible avec le fluide utilisé dans votre application.
- **Boîtier:** Le boîtier du capteur est résistant aux liquides, mais n'est pas conçu pour fonctionner en immersion. Installez le capteur de manière à ce que le boîtier et l'antenne n'entrent pas en contact avec le milieu d'application dans des conditions normales de fonctionnement. L'équipement doit être protégé contre une exposition excessive aux rayons UV. Ce produit ne doit être utilisé que dans des endroits où le risque de choc mécanique est faible.
- **Concevez un système à sécurité intégrée:** Mettez au point un système à sécurité intégrée qui tienne compte de la possibilité de défaillance des capteurs et/ou de l'alimentation électrique. FLOWLINE recommande l'utilisation de systèmes de secours redondants et d'alarmes en complément du système principal.
- **Applications inflammables, explosives ou dangereuses:** Certains modèles EchoBeam® sont homologués pour une utilisation dans des applications générales UNIQUEMENT et ne doivent PAS être utilisés dans des environnements dangereux classifiés. **D'autres modèles EchoBeam® sont homologués pour une utilisation en sécurité intrinsèque et sont destinés aux environnements dangereux classifiés. Pour les applications en sécurité intrinsèque, l'installation doit être effectuée conformément au schéma 8X-CONWIRE et au manuel d'instructions.** Veuillez vous référer à la référence indiquée sur l'étiquette du capteur pour vérifier le modèle exact que vous avez acheté. L'installation doit être conforme à la CEC part I ou au NEC, selon le cas.

SETUP OVERVIEW

The below list highlights the initial steps required to set up your transmitter for operation.

1) **Confirm Part Number (Section Two)**

   Prior to purchasing the sensor, you may have submitted a Level Application Questionnaire (flowline.com/LAQ). If so, it likely resulted in a suggested part number. Please confirm that the suggested part number matches the part number of the purchased sensor. If it does not match and/or meet your application requirements, please contact your distributor.

2) **Measure the Tank (Section Three)**

   Measure the significant tank and fitting dimensions.

3) **Install the Transmitter (Section Four)**

   Review the installation requirements to locate and install the sensor on the tank.

4) **Wire the Transmitter (Section Five)**

   Follow the wiring information based on your sensor model and signal output type.

5) **Basic Configuration (Section Six)**

   Confirm all measurements of the tank for all key dimensions.

   - Accuracy in measurement will result in accuracy of transmitter performance.
   - Consider the offset created by any fittings used for installation.

   Connect EchoBeam® transmitter to LevelTap™ App.

   Step-by-Step Configuration:

   Screen 1

   - **Sensor Name** - Input a unique name or identifier for each sensor or application.
   - **Application** - Select whether the sensor is measuring liquid or solids media.
   - **Units of Measurement** - Select the units of measurement applied in this configuration.
   - **Fail-Safe Output** - Select the signal output if the sensor cannot measure a valid level.

   Screen 2

   - **Sensor Height** – Set the bottom of the tank measurement span or the tank empty setting.

   Screen 3

   - **Fill-Height** - Set the top of the tank measurement span or the tank full setting.

   Screen 4

   - **Display Value** – Set the sensor and App to indicate height, distance, current or percentage.

6) **Check the EchoCurve (Section Six)**

   This tool allows you to view the echo signal returns and filter any that may be problematic.

CONFIGURATION METHODS

The main method for configuring the EchoBeam® is to use the LevelTap™ App on a Smartphone. This can be used to configure and communicate with the EchoBeam® transmitter. The Bluetooth signal has a maximum range of 26' (8m) under ideal conditions (direct line of sight without obstructions). Line of sight will result in the best connection, especially when close to the maximum range of the Bluetooth signal. Depending upon your part number, you may have a built-in display which can also be used to configure EchoBeam®.

Series	LR80	LR81	LR83	LR85
LevelTap™ App	Yes	Yes	Yes	Yes
Push Button Display	No	No	Yes	Yes

USING THE LEVELTAP™ APP

EchoBeam® is configured through the LevelTap™ App, an application-based software program that uses Bluetooth to communicate with EchoBeam® via your smartphone or tablet. LevelTap™ is downloaded via the App Store for iOS and iPadOS operating systems or Google Play for the Android operating system.

Download on the App Store

GET IT ON Google Play

STARTING THE LEVELTAP™ APP

When first starting the LevelTap™ App, you will need to **CREATE AN ACCOUNT**. Please enter the required information and press **CREATE ACCOUNT**. Once you have created an account, thereafter you will access LevelTap™ by pressing **LOG IN** from the Home Screen.

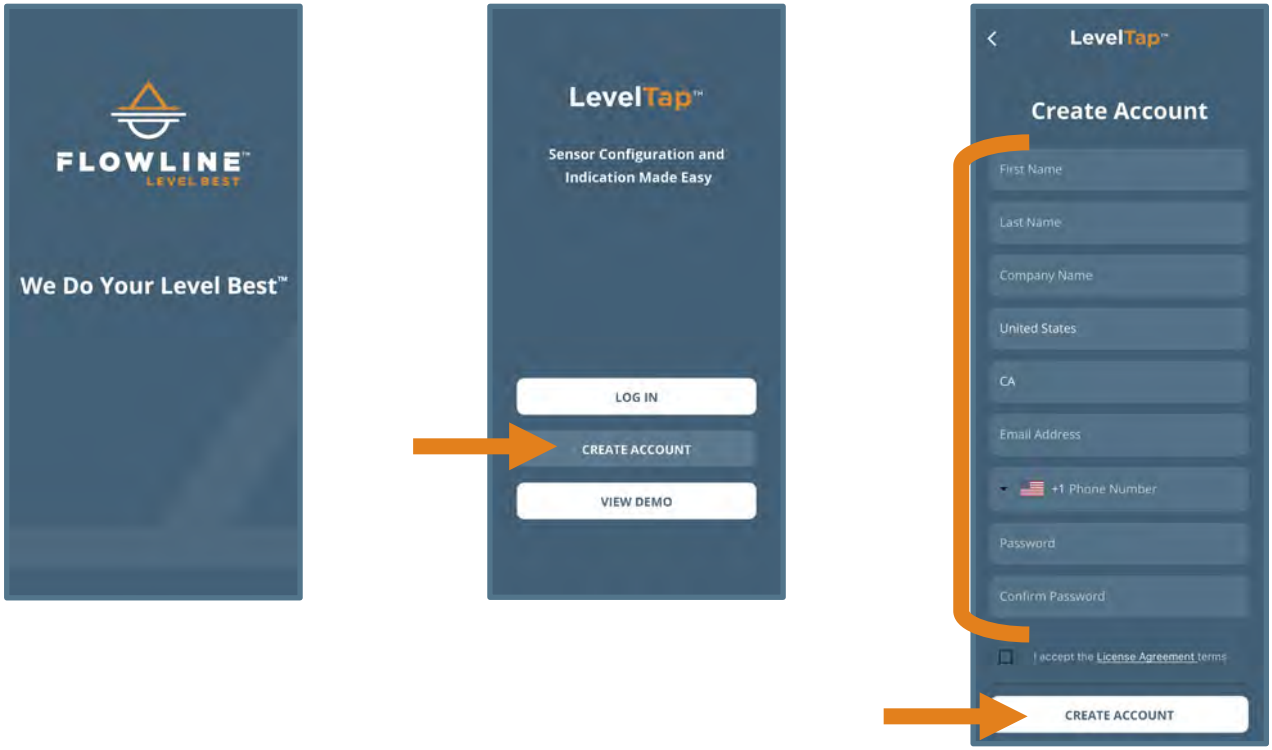

CONNECTING ECHOBEAM® TO THE LEVELTAP™ APP

When accessing LevelTap™, you will initially see a list of sensors that are connected or paired, as well as any unpaired sensors. Prior to your first sensor configuration, the screen will only show powered sensors that are unpaired. If there are no sensors powered on, then the screen will not show any sensors. After installing LevelTap™, the next step is to power on the sensor you want to pair with the App. Wait until the sensor appears under Unpaired Sensors, and then tap on the sensor shown. Finally enter the Sensor PIN code that is located on the sensor label to pair the sensor with the App. When paired, the sensor will appear under Paired Sensors.

Note: The Sensor PIN Code is the manufacturer's date code located on the label of EchoBeam® (see below).



Note: For full configuration of EchoBeam®, please see Section Six.

LEVELTAP™ SENSOR INFORMATION

LevelTap™ provides key information about each sensor.

Sensor's Menu



- 14.001 m – This is the value the sensor is displaying.
- LEVEL HEIGHT / LIQUID – This is what the display is showing (either Level Height, Distance, Current or Percentage) as well as confirming the media is either a liquid or a solid.
- EchoBeam – This is the sensor name defined in LevelTap™.
- LR80-0000 – This is the part number.
- 4-20mA – This is the output of the sensor.
- SN 000496 – This is the serial number of the sensor.

Sensor's Screen



- 14.011 m – This is the value the sensor is displaying.
- LEVEL HEIGHT / LIQUID – This is what the display is showing (either Level Height, Current, Distance or Percentage) as well as confirming the media is either a liquid or a solid.
- EchoBeam – This is the sensor name defined in LevelTap™.
- 90104 – This is the MB version.
- LR80-0000 – This is the part number.
- 4-20 mA – This is the output of the sensor.
- 10084 – This is the DSP version.
- 10018 – This is the RF version.
- SN 000496 – This is the serial number of the sensor.
- 220900 – This is the product date of the sensor.

BASIC REQUIREMENTS

When the antenna transmits the frequency-modulated continuous wave, it has a certain transmission angle or Beam Angle.

Series	LR80	LR81	LR83	LR85
Beam Angle	8°	8°	6°	4°
Min. Distance from Side Wall	7.9” (200mm)	7.9” (200mm)	7.9” (200mm)	19.7” (500mm)

There should be no obstacles in the area radiated by the transmitted FMCW signal from the lower edge of the antenna to the liquid or solid surface to be measured. It is best to avoid the obstacles in the tank during operation, for example: ladders, alarm switches, heating equipment, supports, etc. If necessary, a “False EchoCurve” may be implemented. In addition, please note that the FMCW signal should not intersect with the inflow of liquids or solids. During operation of the transmitter, please note that the highest level of material should not touch the bottom of the transmitter (and if a dead band is configured, enter the dead band). The transmitter should be kept at a minimum distance from the side wall of the tank as stated in the above chart. The installation of the transmitter should enable the transmitting direction of the antenna to be perpendicular to the surface being measured as much as possible.

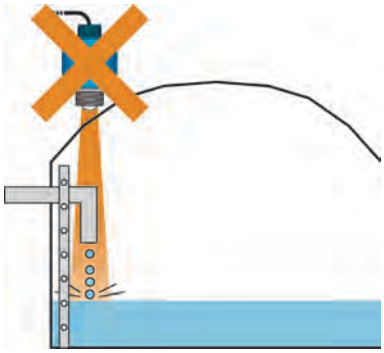

Avoid Obstructions

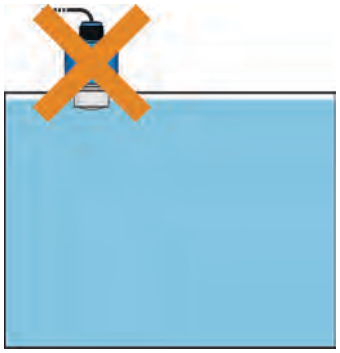

Avoid Material Touching Sensor

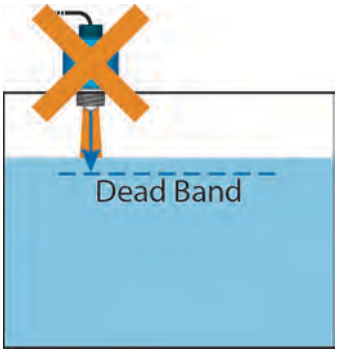

Avoid Level in the Dead Band

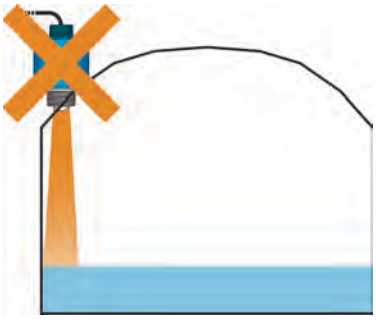

Avoid the Side Wall

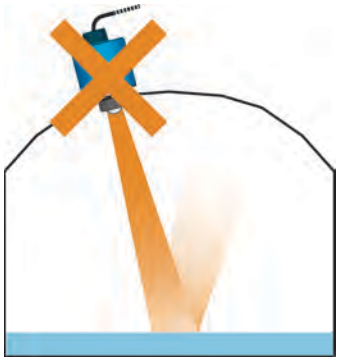

Avoid Mounting at an Angle

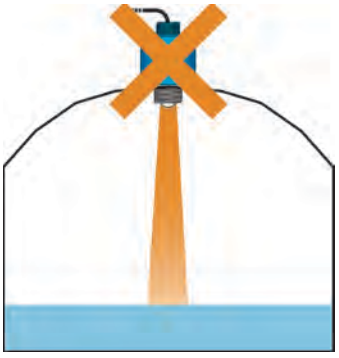

Avoid Mounting in Center of a Domed Metallic Tank.

PART NUMBER

Verify the part number to ensure that the model you received is the model you intended to purchase. The part number can be found on the outside label of the sensor, as shown below:

LR80 Series **LR81 Series** **LR83 Series** **LR85 Series**



The part number will indicate the size and type of mounting fitting required for installing the sensor. Refer to the below part number description for specific information. If any of the above does not match and/or meet your application requirements, please contact your distributor.

LR80 - 0 0 _ 0

Process Mount
- **0** - 1½" NPT
- **1** - 1½" G (includes gasket)

LR81 - _ _ _ _

Approvals
- **0** - General Purpose
- **1** - Intrinsic Safety(1)
- **2** - Dust Protection(2)

Cable Orientation
- **0** - Vertical
- **1** - Horizontal

Process Mount
- **0** - 1½" NPT
- **1** - 1½" G (includes gasket)

Signal Output
- **0** - 4-20mA / HART
- **1** - Modbus
- **2** - SDI-12(3)

LR83 - _ 3 _ _

Approvals
- **0** - General Purpose
- **1** - Intrinsic Safety(1)

Process Mount
- **0** - 1½" NPT
- **1** - 1½" G (includes gasket)

Signal Output
- **0** - 4-20mA / HART
- **1** - Modbus

LR85 - _ 3 _ _

Approvals
- **0** - General Purpose
- **1** - Intrinsic Safety(1)

Process Mount
- **0** - 3" NPT
- **1** - DN80 (includes gasket)
- **3** - 3" ANSI Gimbal Flange
- **5** - DN80 Gimbal Flange

Signal Output
- **0** - 4-20mA / HART
- **1** - Modbus

(1) Intrinsic Safety models are for use in zones containing gases, vapors or mists with a **4-20mA + HART signal output only**.

(2) Dust Protection models are for use in zones containing dust with a 4-20mA + HART signal outputs only.

(3) The SDI-12 output is available with vertical cable orientation only and either process mount.

NUMÉRO DE PIÈCE

Veuillez vérifier le numéro de pièce pour vous assurer que le modèle que vous avez reçu correspond bien à celui que vous souhaitiez acheter. Le numéro de pièce se trouve sur l'étiquette extérieure du capteur, comme indiqué ci-dessous:

LR80 Series **LR81 Series** **LR83 Series** **LR85 Series**



La référence de la pièce indique la taille et le type de fixation nécessaires à l'installation du capteur. Veuillez consulter la description de la référence ci-dessous pour obtenir des informations détaillées. Si aucune des options ci-dessus ne correspond à vos besoins, veuillez contacter votre distributeur.

LR80 - 0 0 _ 0

Process Mount
- **0** - 1½" NPT
- **1** - 1½" G (includes gasket)

LR81 - _ _ _ _

Approvals
- **0** - General Purpose
- **1** - Intrinsic Safety(1)
- **2** - Dust Protection(2)

Cable Orientation
- **0** - Vertical
- **1** - Horizontal

Process Mount
- **0** - 1½" NPT
- **1** - 1½" G (includes gasket)

Signal Output
- **0** - 4-20mA / HART
- **1** - Modbus
- **2** - SDI-12(3)

LR83 - _ 3 _ _

Approvals
- **0** - General Purpose
- **1** - Intrinsic Safety(1)

Process Mount
- **0** - 1½" NPT
- **1** - 1½" G (includes gasket)

Signal Output
- **0** - 4-20mA / HART
- **1** - Modbus

LR85 - _ 3 _ _

Approvals
- **0** - General Purpose
- **1** - Intrinsic Safety(1)

Process Mount
- **0** - 3" NPT
- **1** - DN80 (includes gasket)
- **3** - 3" ANSI Gimbal Flange
- **5** - DN80 Gimbal Flange

Signal Output
- **0** - 4-20mA / HART
- **1** - Modbus

(1) Les modèles à sécurité intrinsèque sont destinés à être utilisés dans des zones contenant des gaz, des vapeurs ou des brouillards, et ne disposent que d'une sortie de signal 4-20 mA + HART.

(2) Les modèles de protection contre la poussière sont destinés à être utilisés dans des zones contenant de la poussière et disposent exclusivement de sorties de signal 4-20 mA + HART.

(3) La sortie SDI-12 est disponible uniquement avec une orientation de câble verticale et quel que soit le type de montage.

BASIC TANK DIMENSIONS

Properly locating the sensor and correctly measuring the tank sets the foundation for sensor configuration. In doing so, consider the sensor's mounting location with respect to relevant fittings, risers, dome tops or cone bottoms, and identify where the measurements are taken from the sensor. The required measurements for basic sensor configuration, including Sensor Height and Fill-Height, are reflected in the below diagram:

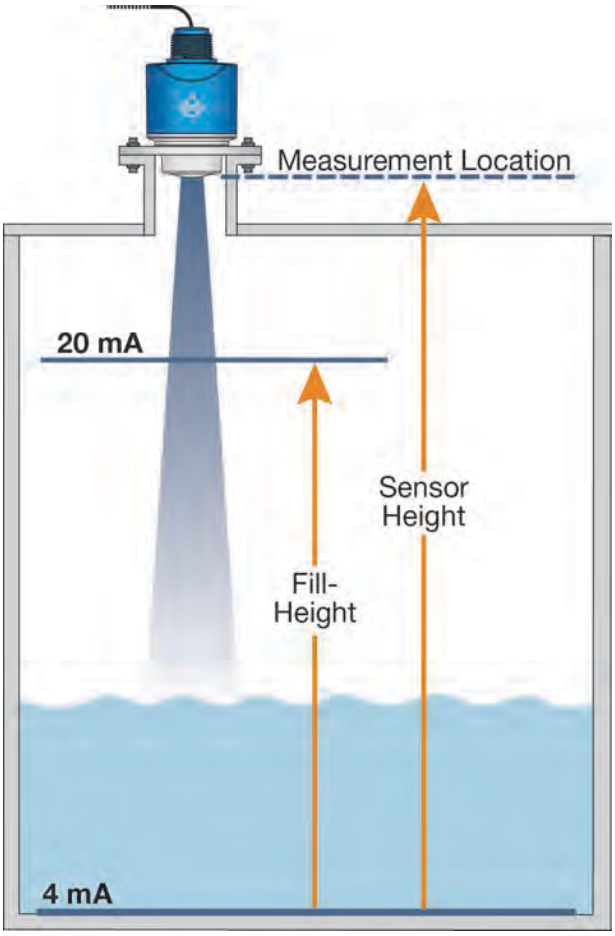

Installation in Liquids

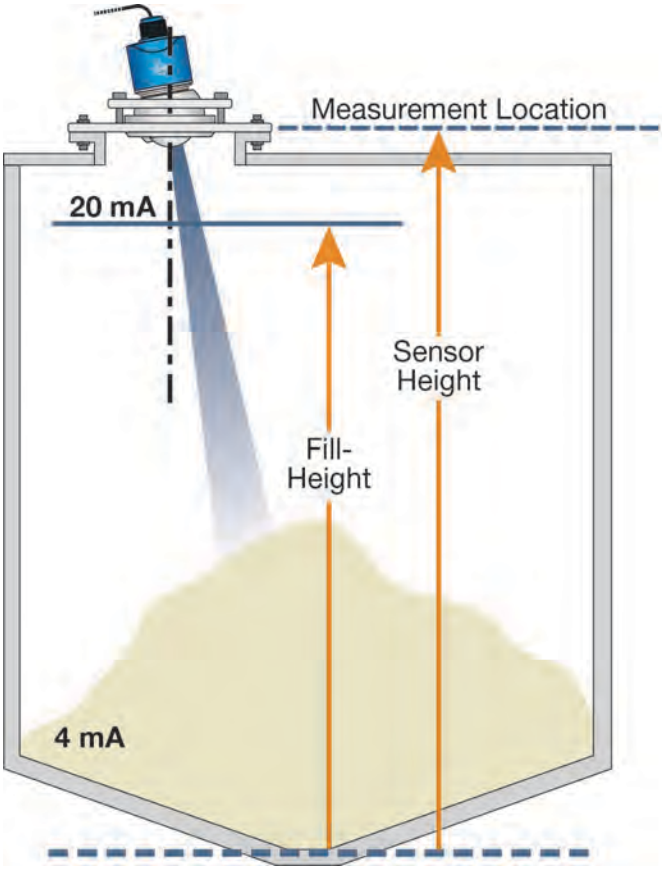

Installation in Solids

All measurements are made from the bottom of the tank up to the bottom of the sensor (Sensor Height) or to the operational full for the tank (Fill-Height).

CONE BOTTOM TANKS

When installing EchoBeam® on a tank with a cone shaped bottom, the sensor's mounting location and tank geometry may influence the sensor's configuration setting. If your requirement is to measure into the cone, location of the sensor is critical. However, if your requirement is only to measure the straight side of the tank, the location of the sensor is not critical.

Measuring the Straight Side

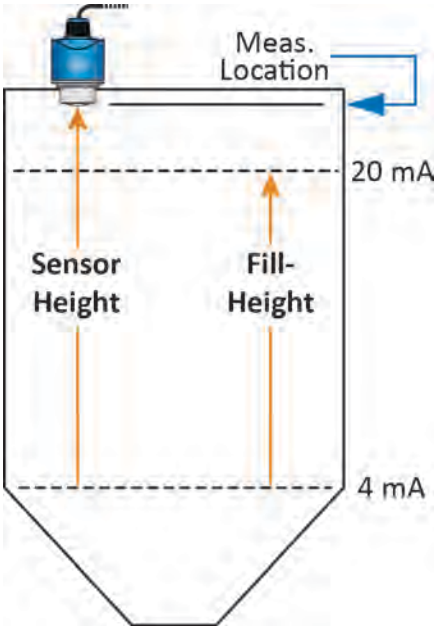

The sensor location is not critical because the lowest level reading is within the straight side wall of the tank.

Measuring into the Cone

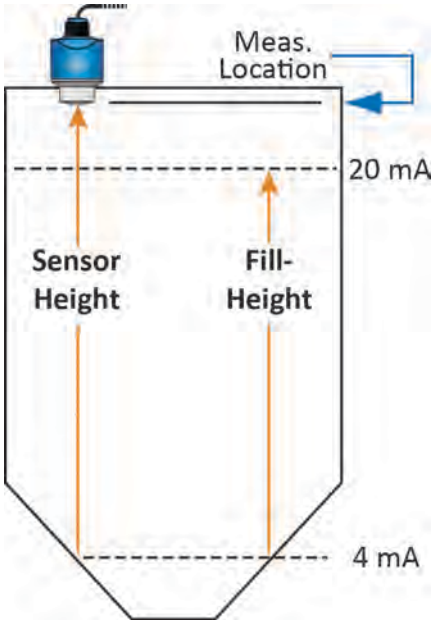

The sensor can read into the cone, but only to where most of the energy reflects to the sensor versus away from it.

Measuring to the Bottom

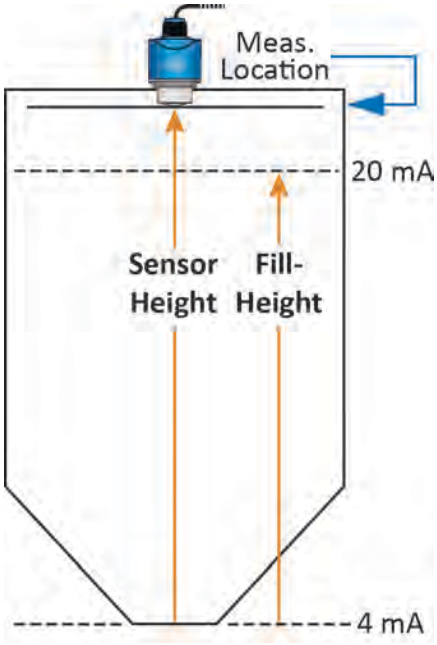

The sensor location is critical. The sensor must be installed over the lowest part of the tank to measure into the cone and to the bottom.

TOP OF TANK CONSIDERATIONS

When installing EchoBeam® on an enclosed tank top, the installed position of the sensor's antenna or measurement location, above or below the top, must be taken into consideration when determining your sensor configuration settings.

Tank Top Installation

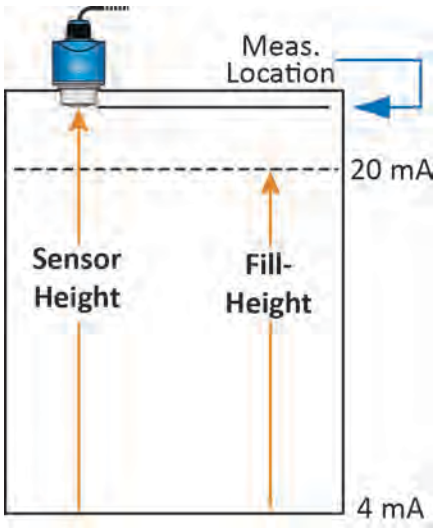

Short Riser Installation

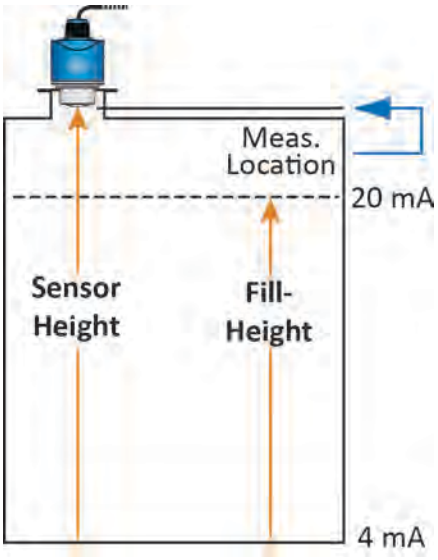

Tall Riser installation

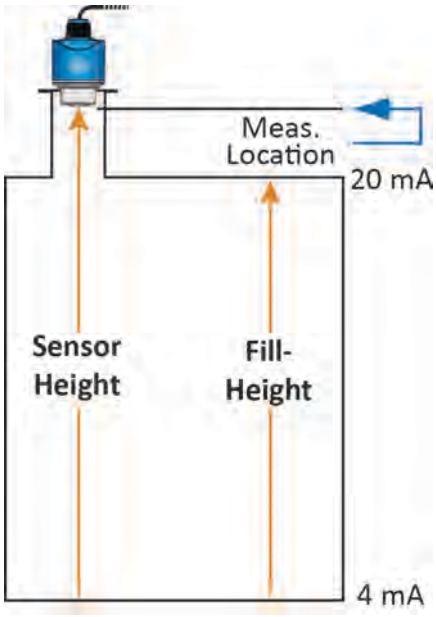

SENSOR OUTPUT TO LOCAL DISPLAY/CONTROLLER

The 4-20mA output is the most common signal that can connect to a local display/controller or to remote devices such as PLCs, SCADA or DCS. The 4-20 mA signal is set relative to the Sensor Height and Fill-Height settings. These settings create an operational range that can be translated into a level reading in defined units (i.e., inches, feet, gallons, meters, liters, etc.).

In the example to the right, the Sensor Height sets the 4mA to the bottom of the tank. Fill-Height sets the 20mA to a level close to the top of the tank. The 4-20mA sensor range correlates to actual units of level measurement. The operational range now will have engineering values of 0 to 10 feet, or 0 to 1000 gallons, or 0 to 120 inches.

Note: If your tank has markers or ticks indicating a specific volume along one side of the tank, set your Fill-Height to one of these ticks / markers for easy conversion to known volume.

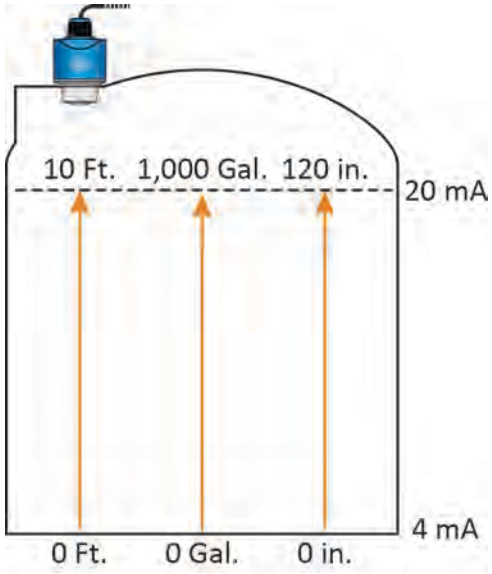

INSTALLATION REQUIREMENTS

EchoBeam® measures the distance between the sensor and the liquid surface below. Typically, all measurements from the sensor originate from the bottom of the antenna. Refer to the Measurement Reference Chart to determine the location where measurement originates on your sensor. To ensure reliable measurement, adhere to the following minimum installation requirements:

1) There are no obstructions between the bottom edge of the installed antenna and the surface of the liquid below, including ladders, walls, tank seams, liquid inflows, rails, other sensors, mixer blades, heating coils, pumps, struts or apparatus. **Note:** Additionally, when the sensor transmits an FMCW signal, the RF signal spreads in a conical shape (determined by its beam angle) over distance. Refer to the Beam Angle Chart to determine what, if any, additional measurement space is required to be free of such obstacles. If such items are present, then a False EchoCurve configuration must be done (Section Eleven).
2) The sensor must be installed with the antenna perpendicular to the surface of the liquid.
3) The sensor must be installed with a distance ≥ 7.9” (200mm) from the side wall of the tank for the LR80, LR81 and LR83 series and ≥ 19.7” (500mm) for the LR85 series.

Series	LR80	LR81	LR83	LR85
Min. Distance from Side Wall	7.9” (200mm)	7.9” (200mm)	7.9” (200mm)	19.7” (500mm)

4) When the Dead Band is configured, the liquid level must not be allowed to enter the dead band (blanking zone) of the sensor.
5) The sensor installation must be done in accordance with relevant local or federal safety regulations.
6) The shield wire must be connected to electrical ground.
7) Do not use the housing to screw the sensor into the installation fitting.
    a. Applying a tightening force against the housing may damage the sensor.
8) Make sure that all parts of the sensor exposed to the application, specifically any portion installed within the tank, are suitable for the process.
    a. Consider any effects from the application temperature, pressure or media.

RADIO COMPLIANCE

See the **Radio Addendum Supplementary Instructions** for radar level measuring instruments with radio approvals at www.flowline.com regarding the safe and regulatory compliant use of this device.

EXIGENCES D'INSTALLATION

Le système EchoBeam® mesure la distance entre le capteur et la surface du liquide. Généralement, toutes les mesures du capteur sont prises à partir de la base de l'antenne. Consultez le tableau de référence des mesures pour déterminer le point de mesure exact de votre capteur. Pour garantir des mesures fiables, respectez les exigences d'installation minimales suivantes:

1) Aucun obstacle ne doit se trouver entre le bord inférieur de l'antenne installée et la surface du liquide, notamment les échelles, les parois, les soudures de la cuve, les arrivées de liquide, les rails, les autres capteurs, les pales d'agitateur, les serpentins de chauffage, les pompes, les supports ou autres appareils. Remarque : De plus, lorsque le capteur émet un signal FMCW, le signal RF se propage de manière conique (déterminée par son angle de faisceau) sur une certaine distance. Consultez le tableau des angles de faisceau pour déterminer l'espace de mesure supplémentaire, le cas échéant, qui doit être exempt de tels obstacles. Si de tels éléments sont présents, une configuration de courbe d'écho parasite doit être effectuée (Section Eleven).
2) Le capteur doit être installé avec l'antenne perpendiculaire à la surface du liquide.
3) Le capteur doit être installé à une distance d'au moins 7,9 pouces (200 mm) de la paroi latérale du réservoir pour les séries LR80, LR81 et LR83, et d'au moins 19,7 pouces (500 mm) pour la série LR85.

Série	LR80	LR81	LR83	LR85
Distance minimale par rapport au mur latéral	7.9” (200mm)	7.9” (200mm)	7.9” (200mm)	19.7” (500mm)

4) Lorsque la zone morte est configurée, le niveau de liquide ne doit pas pénétrer dans cette zone morte (zone d'inactivité) du capteur.
5) L'installation du capteur doit être effectuée conformément aux réglementations de sécurité locales ou fédérales en vigueur.
6) Le fil de blindage doit être connecté à la terre électrique.
7) N'utilisez pas le boîtier pour visser le capteur dans le raccord d'installation.
    a. L'application d'une force de serrage excessive sur le boîtier peut endommager le capteur.
8) Assurez-vous que toutes les parties du capteur exposées à l'application, et plus particulièrement toute partie installée à l'intérieur du réservoir, sont adaptées au processus.
    a. Tenir compte de tous les effets liés à la température, à la pression ou au milieu d'application.

CONFORMITÉ RADIO

Veuillez consulter les **instructions supplémentaires de l'annexe relative à la radio** sur le site www.flowline.com concernant l'utilisation en toute sécurité et conforme à la réglementation de cet appareil de mesure de niveau par radar disposant des homologations radio.

MOUNTING CONSIDERATIONS

Mount the Sensor Perpendicular to the Liquid Level

Always mount the sensor perpendicular to the surface of the liquid. This will enable the return echoes to reach the sensor. Mounting the sensor off-axis will result in weaker return echoes or no return echoes, depending on the degree of angle.



Avoid Obstructions in the Beam Path

Do not mount the sensor in or above the fill stream, other equipment (ladders, pumps, mixers) or structures within the beam path of the sensor. Such items can create false echo returns and prevent the actual level from being seen by the sensor. Find a location where the sensor has a clear view of the liquid surface. If your tank has other equipment near or within the beam path of the sensor, a False EchoCurve should be performed during initial configuration.

Fill Stream Mounting

Mounting on left incorrectly positions sensor above the tank fill stream inlet. Mounting on right is correct as the sensor has an unobstructed view to the liquid level below.

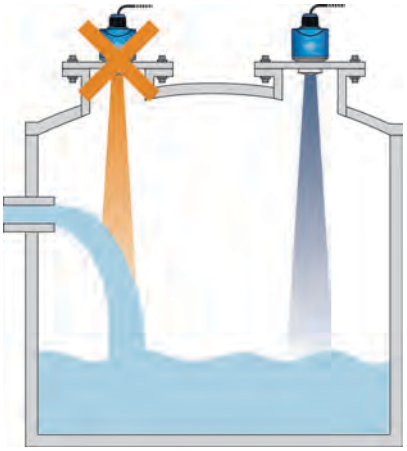

Reflector Installation

Mounting on left incorrectly allows the sensor to receive false echo returns from the step. Mounting on right has an angled baffleboard mounted over the step, which prevents the false echo from returning to the sensor. As such, the sensor only receives correct echo returns from the liquid level.

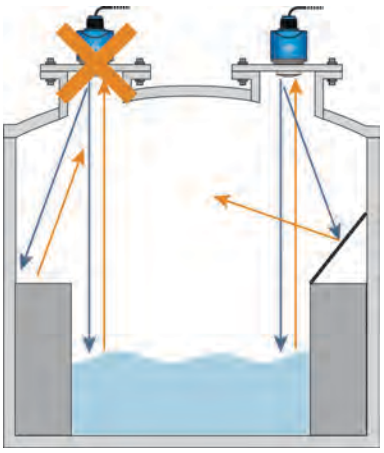

SIDE WALL INSTALLATION

The minimum distance (independent of beam angle) that the transmitter can be mounted next to the straight side wall of the tank is 7.9” (200mm) for the LR80, LR81 and LR83 series and 19.7” (500mm) for the LR85 series as measured from the transmitter centerline to the side wall. If you are **not** able to install the sensor more than 7.9” (200mm) / 19.7” (500mm) away from the side wall, or if there is material build up on the side wall (within the beam angle), perform a False EchoCurve during initial configuration.

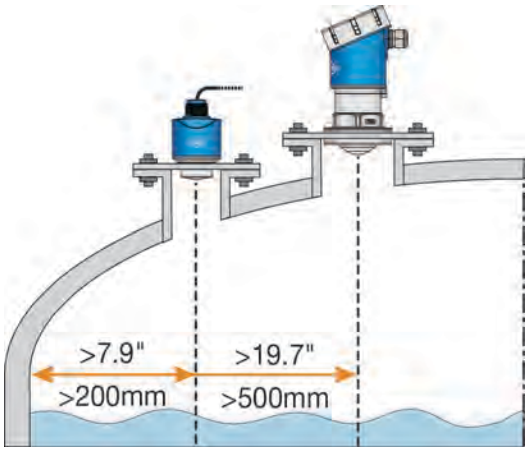

DOME TOP TANKS

In metal tanks, avoid mounting the sensor in the center of a dome top tank. The center of such a tank will multiply the echoes, making sensor operation difficult.

Note: EchoBeam can be mounted in the center of a non-metallic tank.

Correct Mounting

In a metal dome top tank, always mount the sensor off center.

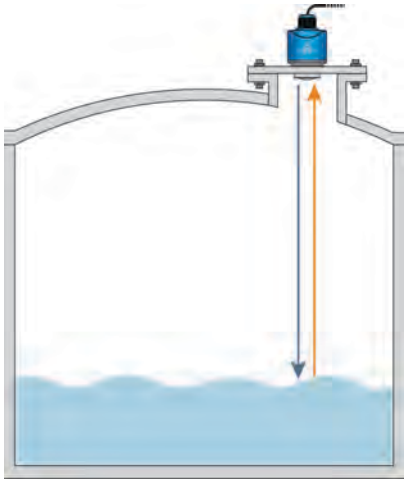

Incorrect Mounting

In a metal dome top tank, do not mount the sensor in the center.

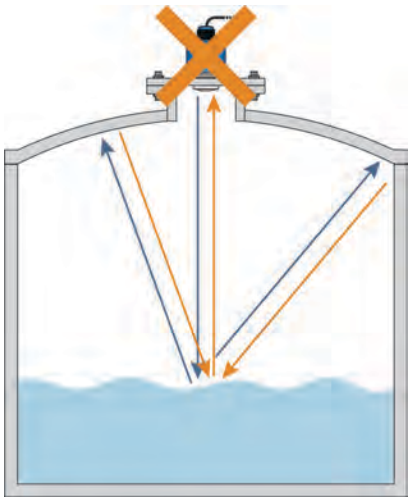

CONE BOTTOM TANKS (LIQUIDS)

In cone bottom tanks, it can be advantageous to mount the sensor in the center of the tank, making it possible for the sensor to measure closer to the bottom of the tank. If the sensor is mounted over an angled bottom, and the level drops below the angle, the echo will be deflected away from the sensor, resulting in poor operation. The sensor can be mounted over an angled bottom if the level is maintained within the straight side wall so the sensor will receive echo returns.

Center Mount – Correct

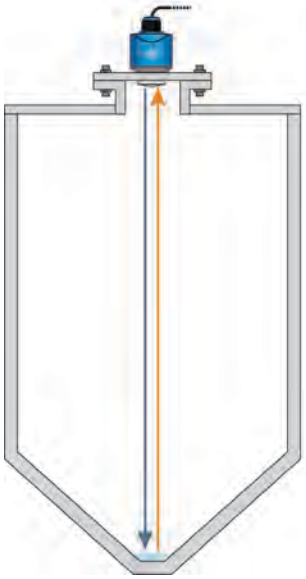

Level Below Side Wall – Incorrect

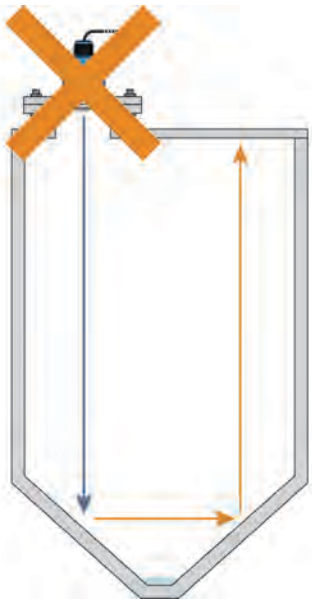

Level Above Side Wall – Correct

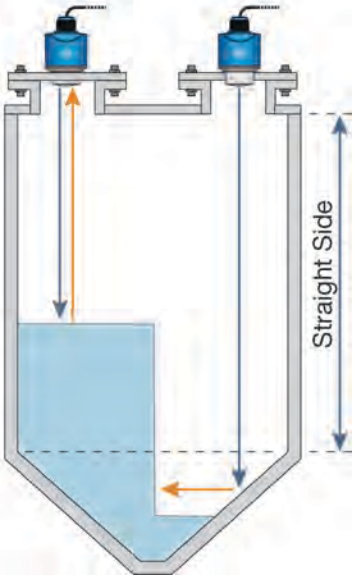

CONE BOTTOM TANKS (SOLIDS)

To measure as much of the solids volume as possible, the antenna must be aimed at the lowest point within the tank. With any cylindrical shaped tank with a cone bottom, the sensor should be mounted half the radius (½R) from the side wall. If ½R cannot be met, it is preferred to mount the sensor closer to the side wall and away from the center of the tank.

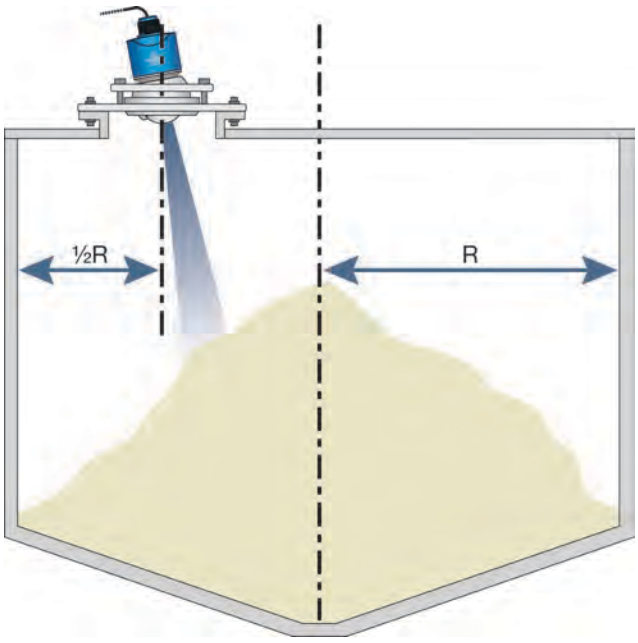

FLANGE RISER INSTALLATION

The transmitter can be installed within a riser if the material (liquids or solids) has a strong reflective property (dielectric constant) providing a strong echo return. When installing the transmitter on a flange with a riser (or any fitting that is tall and narrow), make sure the ends of the riser are smooth and without bulges or burrs. If necessary, a False EchoCurve may be required. The below information describes the maximum distance that the antenna can be recessed within a riser based on the diameter and height of the fitting.

LR80, LR81 and LR83 Series Only

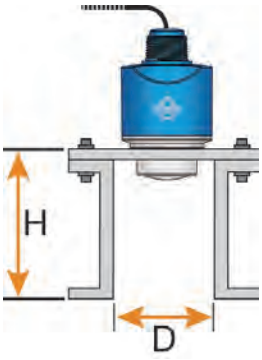

Diameter (D)	Height (H)
2” (40mm)	5.9” (150mm)
2” (50mm)	5.9” (150mm)
3” (80mm)	7.9” (200mm)
4” (100mm)	11.8” (300mm)
5” (125mm)	15.7” (400mm)
6” (150mm)	19.7” (500mm)

LR85 Series Only

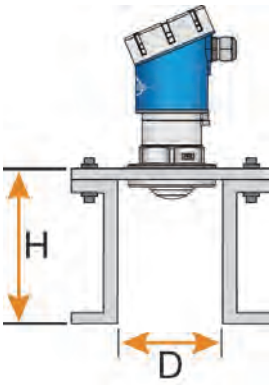

Diameter (D)	Height (H)
4” (100mm)	11.8” (300mm)
5” (125mm)	15.7” (400mm)
6” (150mm)	19.7” (500mm)

AGITATOR OR MIXER

If there are agitators or mixers in the tank, the transmitter should be mounted as far away from the blades as possible. Once the installation is complete, a False EchoCurve should be performed while the agitator or mixer is in motion to map out and eliminate false echo returns from the blades. If significant foam and/or agitation exists within the application, a stand-pipe installation should be considered.

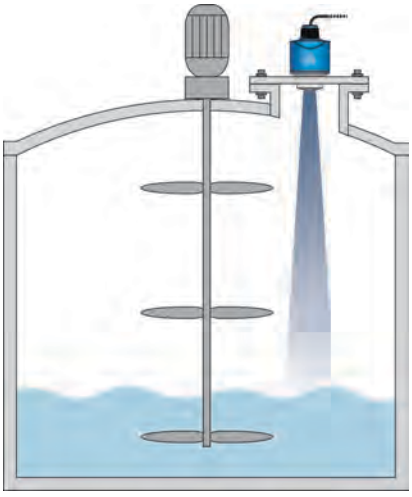

BEAM ANGLE

The emitted frequency-modulated continuous wave signal will expand along its specified beam angle for the entire height of the tank. Place the transmitter so that objects will not interfere with the beam path underneath the sensor. The beam angle is a function of the transmitter series and antenna length. Verify the beam angle specification of your transmitter and reference the below charts to determine the amount of free measurement space required under the installed transmitter.

Beam Angle	8°	6°	4°
Height (Feet)	Diameter (Feet)	Diameter (Feet)	Diameter (Feet)
10	1.40	1.05	0.70
20	2.80	2.10	1.40
30	4.20	3.14	2.10
40	5.59	4.19	2.79
50	6.99	5.24	3.49
60	8.39	6.29	4.19
70	9.79	7.34	4.89
80	11.19	8.39	5.59
90	12.59	9.43	6.29
100	13.99	10.48	6.98

Height (meters)	Diameter (meters)	Diameter (meters)	Diameter (meters)
5	0.70	0.52	0.35
10	1.40	1.05	0.70
15	2.10	1.57	1.05
20	2.38	2.10	1.40
25	3.50	2.62	1.75
30	4.20	3.14	2.10

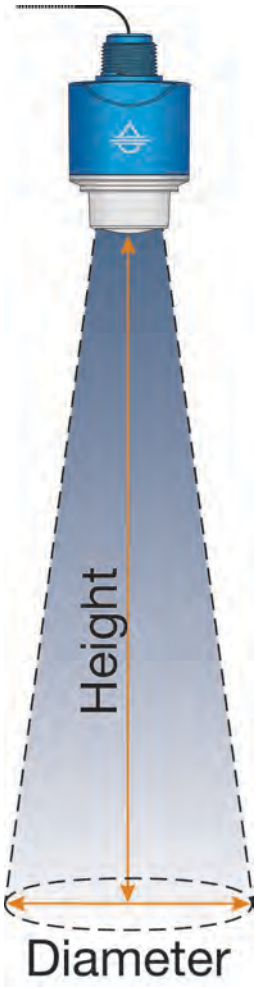

READING THROUGH PLASTIC & FIBERGLASS TANKS

The 80GHz radar energy that emits from EchoBeam can read through low dielectric tank material, such as plastic and fiberglass tanks. This allows the sensor to be mounted outside the tank with the sensor still reading the media inside the tank (avoids having to cut a hole). Sensor can be attached to the top of the tank (using the LM53-4855 adhesive tank top fitting) or suspended over the tank top (using an LM50-_S3_ top wall or side wall bracket).

Flat Top Tank

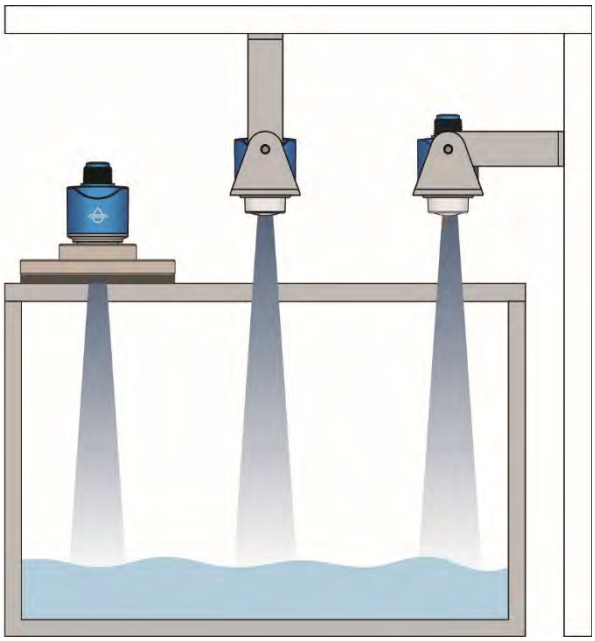

Dome Top Tank

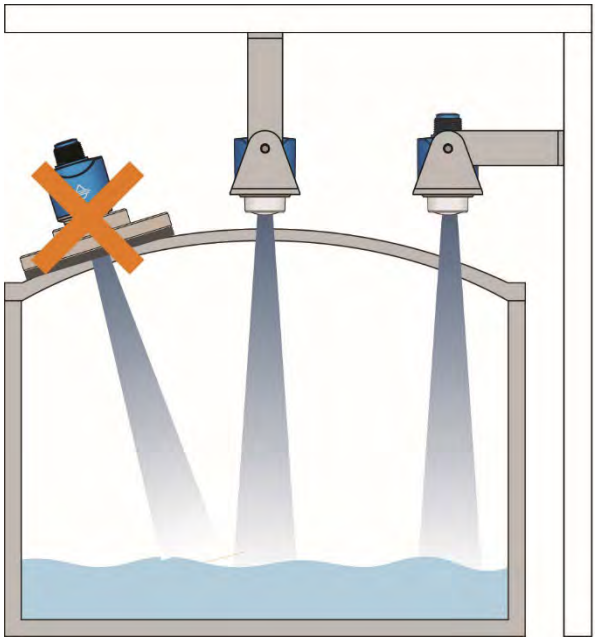

Tips for mounting through tank top:

- The top of the tank cannot be greater than 0.5” (12.7mm) thick.
- Tank must be a low dielectric material (non-metallic).
- The liquid must have a dielectric greater than 10.
- Sensor must be level (not at an angle).
- Sensor must be at least 4” (100mm) above the top of the tank when suspended.

BYPASS INSTALLATION

Bypass installations can avoid issues from turbulence, substantial foam or other equipment in the sensor's beam path.

Note: The use of a bypass is not recommended with liquids that significantly coat or scale. As a rule, if the inside wall of the tank has material build-up, then the inside of the bypass will also have build-up that will affect the transmitter's operation. When installing a sensor in a bypass, follow the below guidelines:

1) The 20mA setting must be placed at or below the upper tank connection pipe.
2) The 4mA setting must be placed at or above the bottom tank connection pipe.
3) It is recommended to perform a False EchoCurve when the transmitter is installed in a bypass.

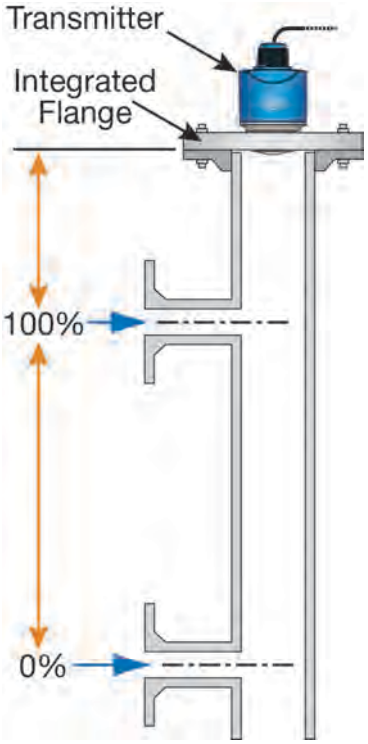

Construction

1) The bypass material must be **metal** with a smooth inner pipe wall. The minimum pipe size is dependent upon the series and antenna length.
2) There is a minimum distance >11.8" (>300mm) between the bottom of the antenna and the top edge of the upper tank connection pipe.
3) Any welded joints must be straight with a gap size ≤ 1/254" (0.1 mm).
4) Flanges should be welded to the sight glass tube.
5) The inner diameter of the sight glass cannot change over the entire pipe length.

Standpipe / Bypass Pipe Size vs. Series

1) The minimum pipe size is 2" with the LR80, LR81 and LR83 series.
2) The minimum pipe size is 4" with the LR85 series.

STANDPIPE INSTALLATION

An alternative to a metal bypass is to install the transmitter on a metal standpipe mounted inside of the tank. To avoid issues from turbulence, substantial foam or other equipment in the sensor's beam path such as mixers, install the sensor within a standpipe (still well). A standpipe installation can be used with liquids with a dielectric constant as low as 1.6.

Note: The use of a standpipe is not recommended with liquids that significantly coat or scale. As a rule, if the inside wall of the tank has material build-up, then the inside of the standpipe will also have build-up that will affect the transmitter's operation.

When installing a transmitter in a standpipe, follow the below guidelines:

1) The 20mA setting must be below the upper vent hole and the bottom of the antenna.
2) The 4mA setting is typically placed at or near the bottom of the standpipe.
3) It is recommended to perform a False EchoCurve when the sensor is installed in a standpipe.

Integrated Flange

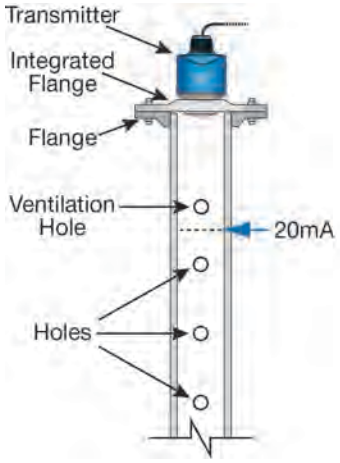

Tapped Flange

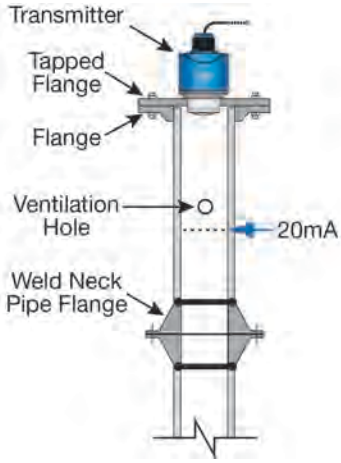

Reducer Bushing

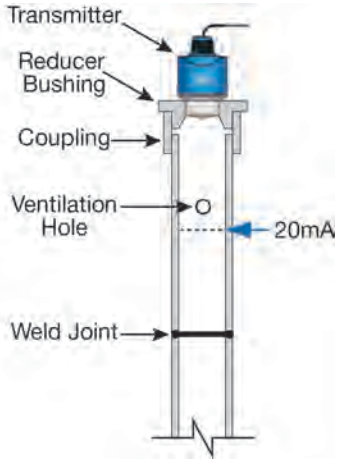

Standpipe Construction

1) The standpipe material must be **metal** with a smooth inner pipe wall.
2) The minimum pipe size is 2" with the LR80, LR81 and LR83 series (4" with the LR85 series).
3) Any welded joint must be straight with a gap size ≤ 1/254" (0.1 mm).
4) Flanges should be welded to the standpipe tube.
5) In the case of a pipe extension with a welded neck flange or pipe collar, make sure the inner surfaces are aligned and accurately joined together.
6) When securing the pipe to the tank, **do not** weld through the pipe wall.
   a) Roughness on the inside caused by unintentional pipe penetration should be removed.
   b) Not doing so will cause strong false echo returns and encourage buildup within the pipe.
7) The diameter of any holes along the pipe must be ≤ 1/5" (5 mm).
   a) The top ventilation hole must be above the 20mA setting.
   b) The holes must be vertically aligned on one side of the pipe with all burrs removed.
      i) The number of holes does not matter.
      ii) The inner diameter of the pipe cannot change over the entire pipe length.

WEIR INSTALLATION

When installing EchoBeam® in a weir application, always defer to the installation requirements from the weir manufacturer. Below are some typical installation requirements.

- Mount the transmitter upstream from the weir.
- Always install it in the center of the weir.
- Keep the transmitter no less than 15.75” (40cm) from the highest level of water (typically from the top of the weir plate).

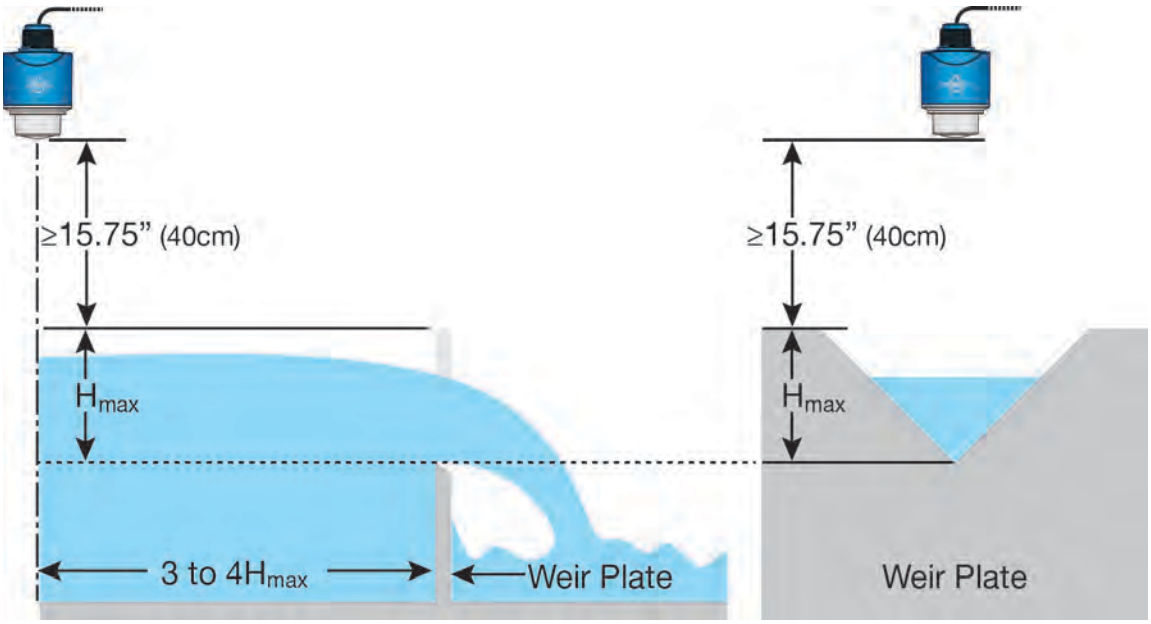

FLUME INSTALLATION

When installing EchoBeam® in a Flume application, always defer to the installation requirements from the Flume manufacturer. Below are some typical installation requirements.

- Always install it in the center of the flume.
- Keep the transmitter no less than 15.75” (40cm) from the highest level of water (typically the crest of the flume).

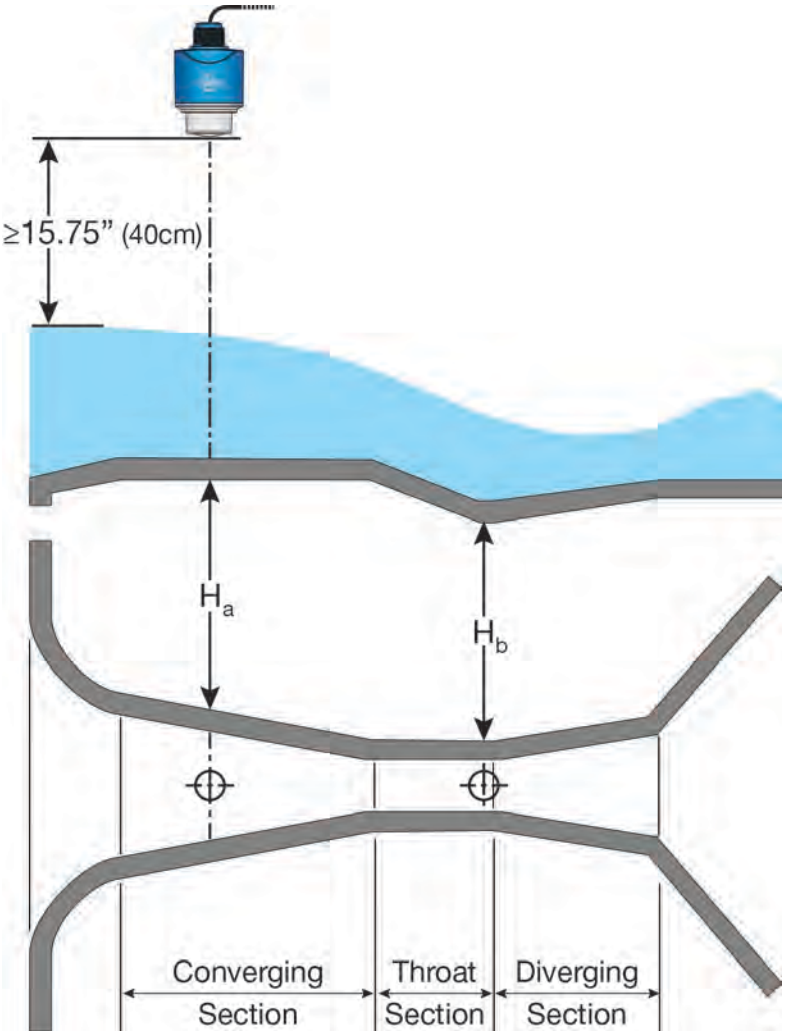

4-20MA WIRING

Transmitter power supply and current signal share the same two-wire shielded cable. The sensor supply voltage should never exceed 30 VDC and be greater than 12 VDC. Always provide complete electrical and physical separation between the sensor supply circuit and the main circuit.

Note: Remember that the output voltage of the power supply can be lower under nominal load (with a sensor current of 20.5 mA or 22 mA) and/or with the addition of other instruments placed within the circuit.

Note: If voltage spikes or surges are expected, adequate isolation protection must also be provided.

ELECTRICAL, USAGE AND SAFETY

1) Wiring should always be done by a licensed electrician in accordance with national, state and local codes.
2) Never use a general-purpose transmitter (LR8_-**0**_ _ _-_ _) in environments classified as hazardous.
3) Where personal safety or significant property damage can occur due to a spill, the installation must have a redundant fail-safe backup system installed which accounts for sensor and/or power failure.

CABLE MODELS - 4-20MA WIRING

The Red Wire or Positive (+) and Black Wire or Negative (-) terminals are for connection to a 12-30 VDC power supply or to a 4-20 mA loop power source. The wire to the terminals can be extended up to 1,000 feet using 16–22-gauge wire.



DISPLAY MODELS - 4-20MA WIRING

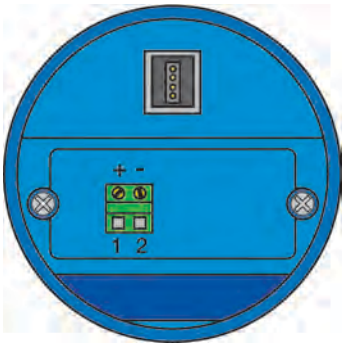

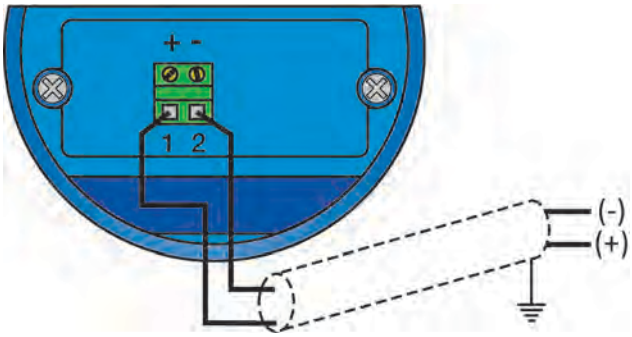

Note: The transmitter should be wired with shielded 2-conductor cable (16 to 22 AWG) to protect from electromagnetic interference. If using a liquid tight connector, select a cable with an outer diameter that is designed to ensure an effective seal with the connector [typically between 0.20” to 0.35” (5 to 9 mm)].

CABLAGE 4-20 MA

L'alimentation de l'émetteur et le signal de courant utilisent le même câble blindé à deux fils. La tension d'alimentation du capteur ne doit jamais dépasser 30 V CC et doit être supérieure à 12 V CC. Il est impératif d'assurer une séparation électrique et physique complète entre le circuit d'alimentation du capteur et le circuit principal.

Remarque : N'oubliez pas que la tension de sortie de l'alimentation peut être inférieure sous charge nominale (avec un courant de capteur de 20,5 mA ou 22 mA) et/ou en cas d'ajout d'autres instruments dans le circuit.

Remarque : Si des pics ou des surtensions sont à prévoir, une protection d'isolation adéquate doit également être mise en place.

ÉLECTRICITÉ, UTILISATION ET SÉCURITÉ

1) Le câblage doit toujours être effectué par un électricien agréé, conformément aux normes nationales, régionales et locales.

2) N'utilisez jamais d'émetteur à usage général (LR8_-0_ _ _-_ _) dans des environnements classés comme dangereux.

3) Lorsque la sécurité des personnes ou des dommages matériels importants peuvent survenir en cas de fuite, l'installation doit être équipée d'un système de sécurité redondant qui prend en compte les défaillances du capteur et/ou de l'alimentation électrique.

MODÈLES À CÂBLE – CÂBLAGE 4-20MA

Les bornes rouge (positive, +) et noire (négative, -) servent à la connexion à une alimentation électrique de 12 à 30 V CC ou à une source d'alimentation en boucle de 4 à 20 mA. Le câble reliant les bornes peut être prolongé jusqu'à 300 mètres (1 000 pieds) à l'aide d'un fil de calibre 16 à 22 AWG.



MODÈLES D'AFFICHAGE - CÂBLAGE 4-20MA

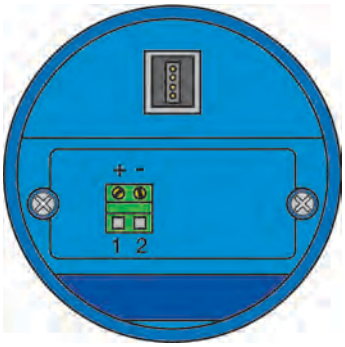

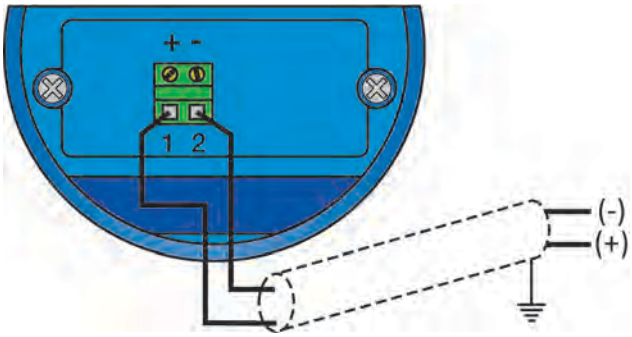

Remarque: L'émetteur doit être câblé avec un câble blindé à deux conducteurs (calibre 16 à 22 AWG) pour le protéger des interférences électromagnétiques. Si vous utilisez un connecteur étanche, choisissez un câble dont le diamètre extérieur est adapté pour assurer une étanchéité efficace avec le connecteur [généralement entre 0,20 et 0,35 pouce (5 à 9 mm)].

WIRING TO DISPLAYS, CONTROLLERS & PLC'S (GENERAL PURPOSE)

Below are examples of how to wire EchoBeam® to common displays, controllers and PLC's.

DataView™ LI55 Series
Level Controller

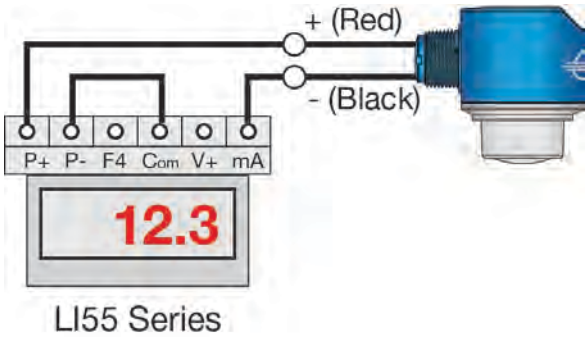

DataLoop™ LI23 Series
Level Indicator
(Without Backlight)

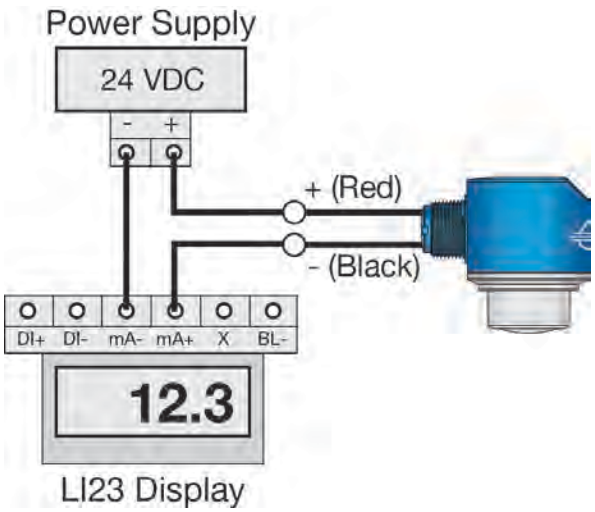

DataLoop™ LI23 Series
Level Indicator
(With Backlight)

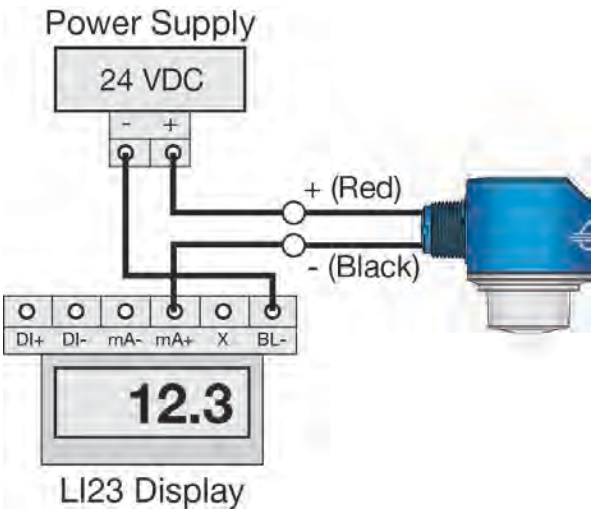

WIRING TO DISPLAYS, CONTROLLERS & PLC'S (GENERAL PURPOSE)

DataPoint™ LC52 Series Level Controller (*JWA Mode - Factory Setting)

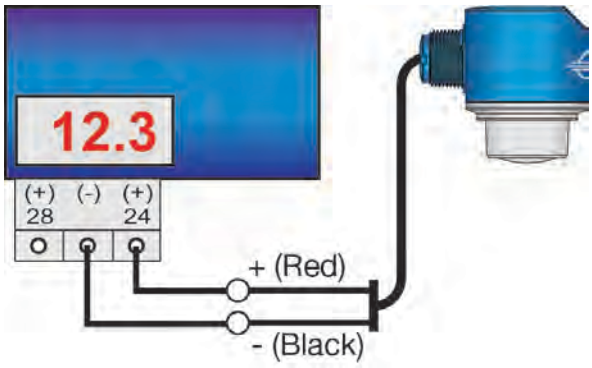

*See LC52 manual for jumper settings

DataPoint™ LC52 Series Level Controller (*JWB Mode)

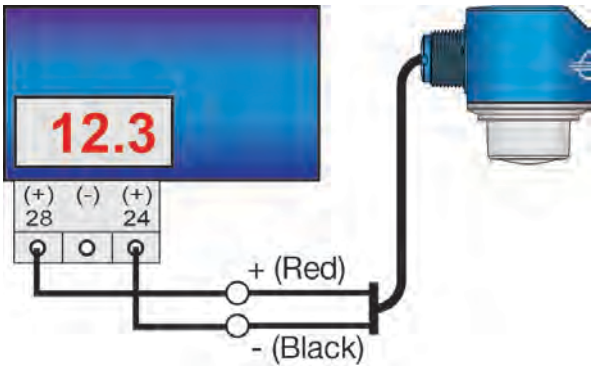

*See LC52 manual for jumper settings

Generic Loop Powered Display

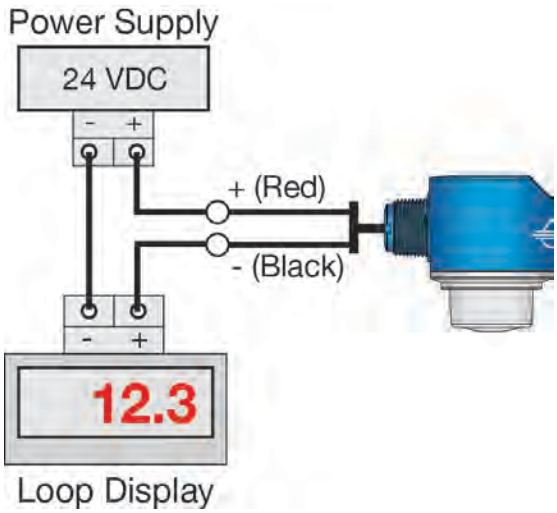

Generic PLC

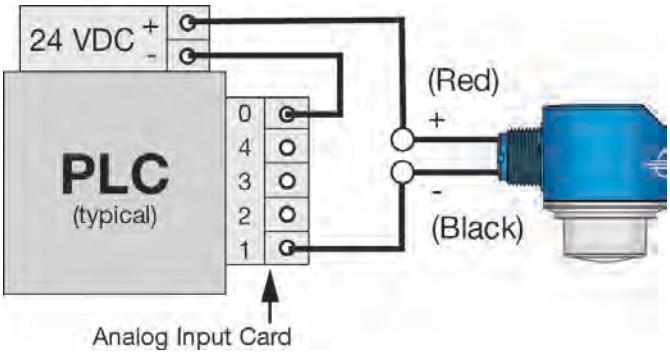

* Refer to the DataPoint™ LC52 Series Level Controller manual for information on JWA mode and JWB mode settings in the controller.

WIRING TO DISPLAYS, CONTROLLERS & PLC'S (INTRINSICALLY SAFE)

Below are examples of how to wire EchoBeam® to common displays, controllers and PLC's.

DataView™ LI55 Series Level Controller

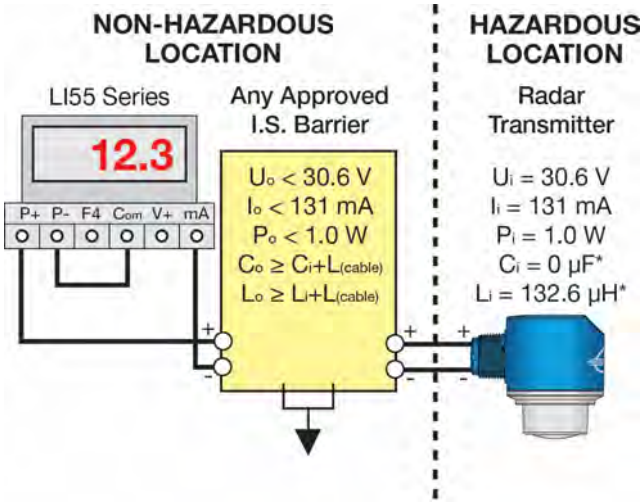

* For LR81-1_ _0 series, $Ci=L_{cable(ft)}$ x 36pF/ft and Li =132.6 µH + $L_{cable(ft)}$ x 0.083 µH/ft

DataLoop™ LI23 Series Level Indicator (Without Backlight)

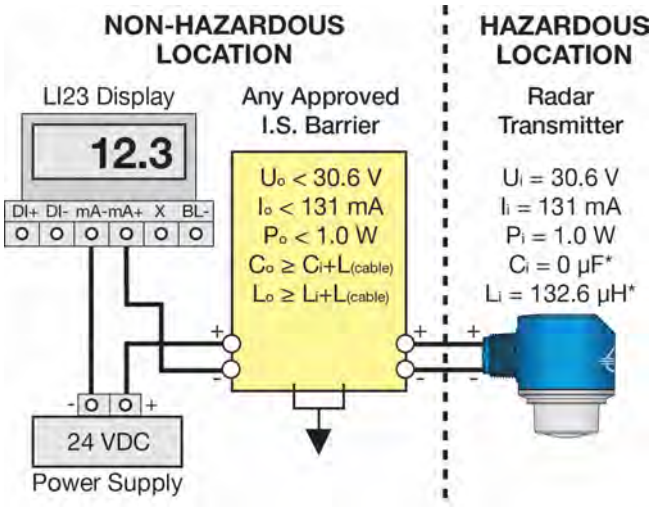

DataLoop™ LI23 Series Level Indicator (With Backlight)

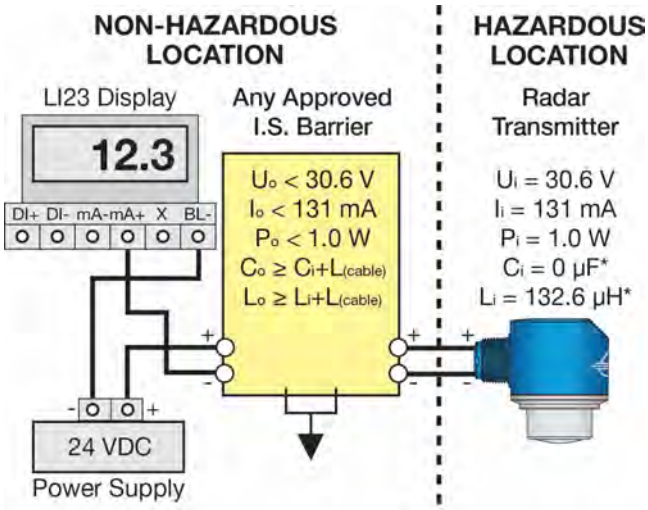

* For LR81-1_ _0 series, $Ci=L_{cable(ft)}$ x 36pF/ft and Li =132.6 µH + $L_{cable(ft)}$ x 0.083 µH/ft

WIRING TO DISPLAYS, CONTROLLERS & PLC'S (INTRINSICALLY SAFE)

Generic Loop Powered Display

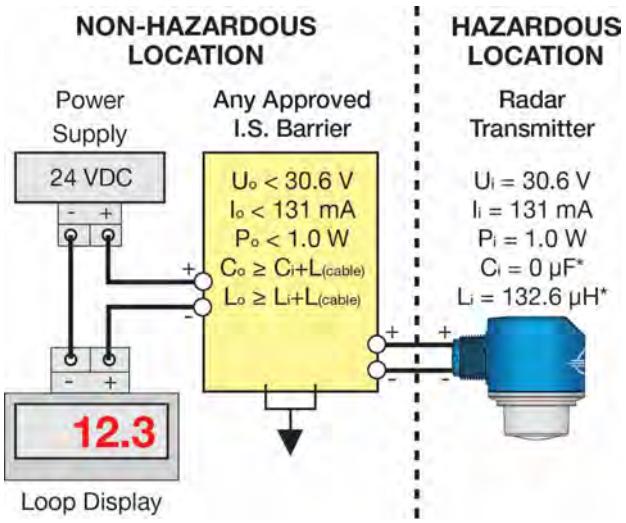

Generic PLC

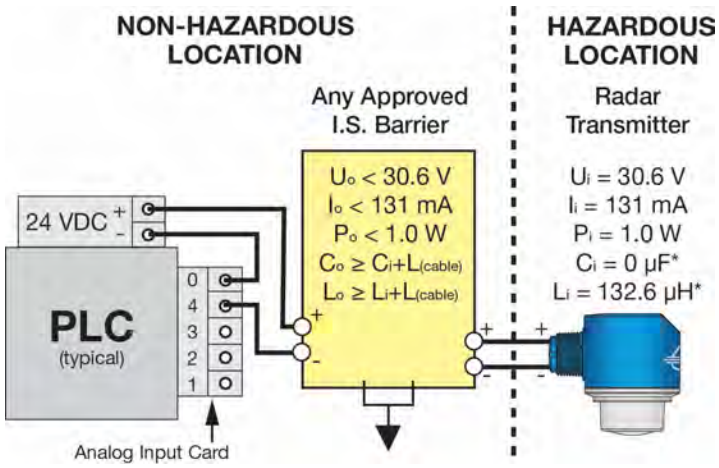

* For LR81-1_ _0 series, $Ci=L_{cable(ft)}$ x 36pF/ft and $Li = 132.6\ \mu H + L_{cable(ft)}$ x 0.083 µH/ft

DataPoint™ LC52 Series Level Controller (JWA Mode** - Factory Setting)

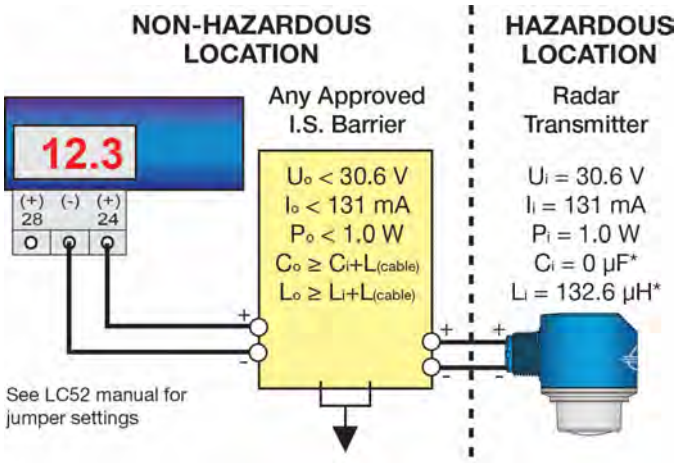

DataPoint™ LC52 Series Level Controller (JWB Mode**)

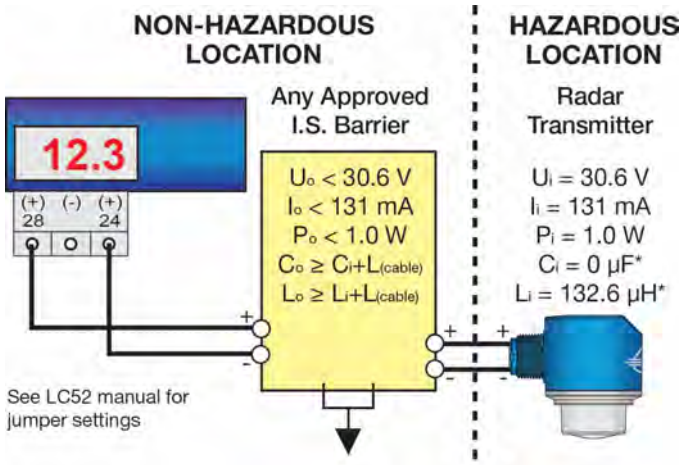

* For LR81-1_ _0 series, $Ci=L_{cable(ft)}$ x 36pF/ft and $Li = 132.6\ \mu H + L_{cable(ft)}$ x 0.083 µH/ft

** Refer to the DataPoint™ LC52 Series Level Controller manual for information on JWA mode and JWB mode settings in the controller.

HART LOOP POWERED OUTPUT

The advantage of a HART protocol is that it can communicate over existing 4–20 mA analog current loops. HART shares the two wires used by the 4-20mA signal wires. The transmitter's supply voltage should never exceed 30 VDC and be greater than 12 VDC. Always provide complete electrical and physical separation between the sensor supply circuit and the main circuit.

Note: If voltage spikes or surges are expected, adequate isolation protection must also be provided.

CABLE MODELS – HART WIRING

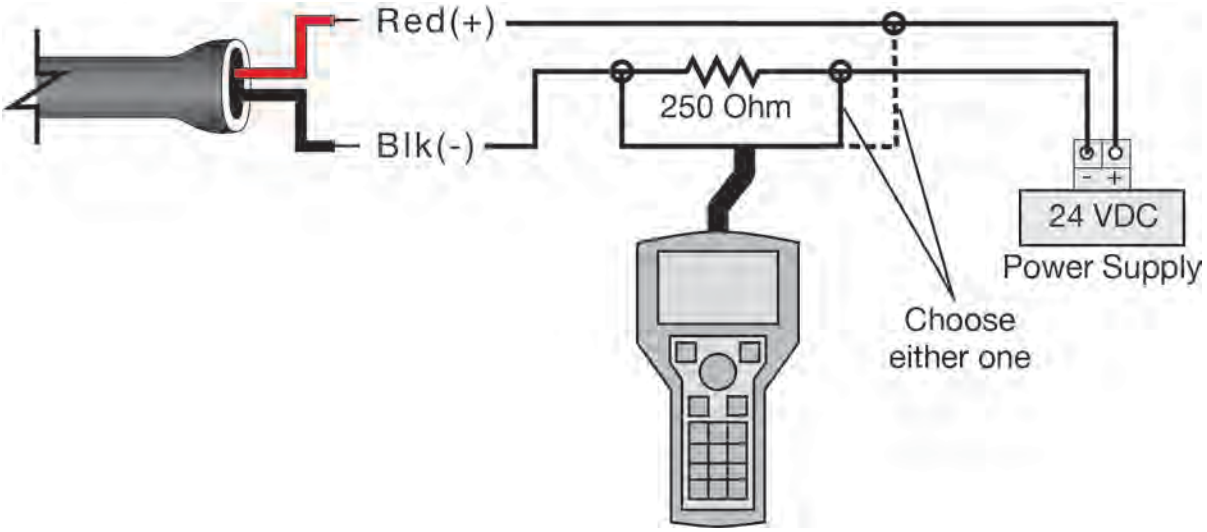

DISPLAY MODELS – HART WIRING

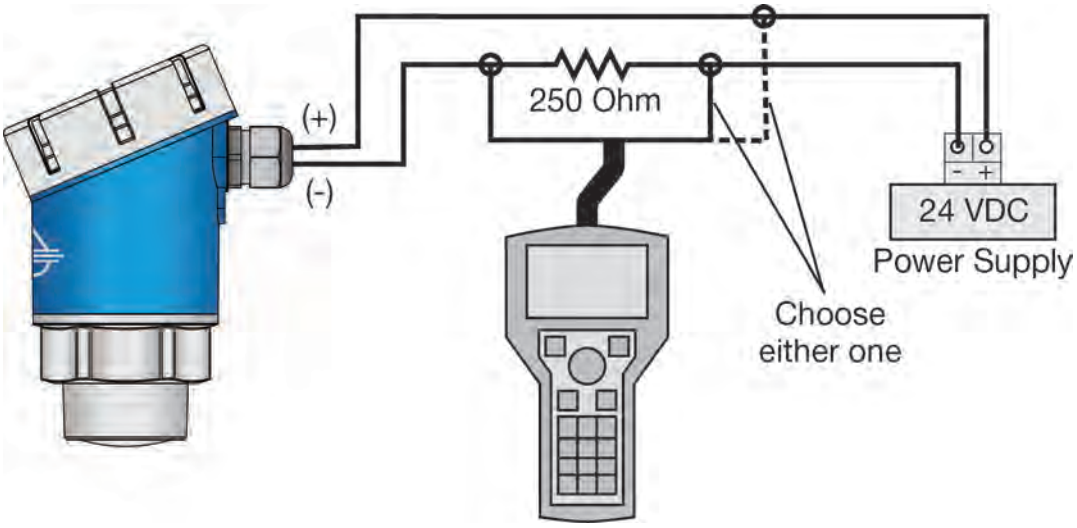

Note: The transmitter should be wired with shielded 2-conductor cable (16 to 22 AWG) to protect from electromagnetic interference. If using a liquid tight connector, select a cable with an outer diameter that is designed to ensure an effective seal with the connector [typically between 0.20" to 0.35" (5 to 9 mm)].

MODBUS/RS485 WIRING

Transmitter power supply is provided with two wires and the RS485 communication is provided on two separate wires. A single 4-conductor shielded cable can be used or two separate 2-conductor cables can be used with the Modbus / RS485 output.

Note: The RS485 communication must always use a shielded cable and shield wire must be grounded. The transmitter's supply voltage should never exceed 30 VDC and be greater than 9 VDC. Always provide complete electrical and physical separation between the sensor supply circuit and the main circuit.

Note: If voltage spikes or surges are expected, adequate isolation protection must also be provided.

CABLE MODELS – MODBUS WIRING

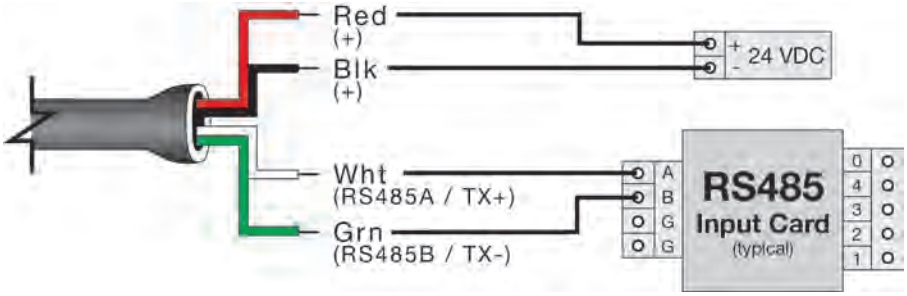

DISPLAY MODELS – MODBUS WIRING

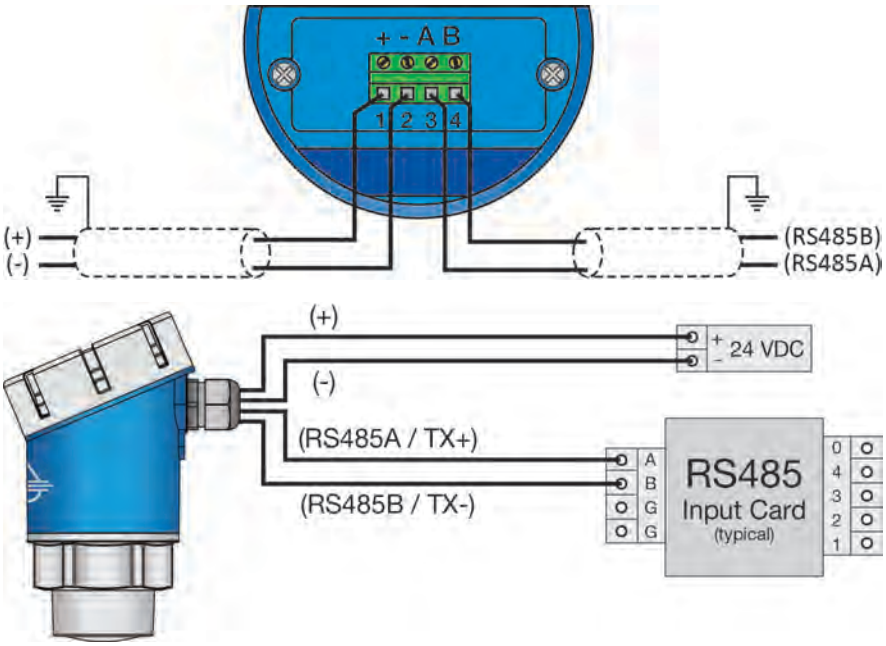

Note: The transmitter should be wired with shielded 4-conductor cable (16 to 22 AWG) to protect from electromagnetic interference. If using a liquid tight connector, select a cable with an outer diameter that is designed to ensure an effective seal with the connector [typically between 0.20" to 0.35" (5 to 9 mm)].

SDI-12 WIRING

Serial Digital Interface at 1200 Baud (SDI-12) is an asynchronous, serial data transmission protocol. It is often used as a communication platform between data loggers and transmitters in environmental applications. Transmitter power is supplied through Power / Red, and the Ground is through Ground / Black. The SDI-12 output is provided through Data / White.

Note: If the power supply is not tied to the input card ground, then a jumper wire may be required. The transmitter's supply voltage should never exceed 30 VDC and be greater than 9 VDC.

Note: If voltage spikes or surges are expected, adequate isolation protection must also be provided.

CABLE MODELS – SDI-12 WIRING

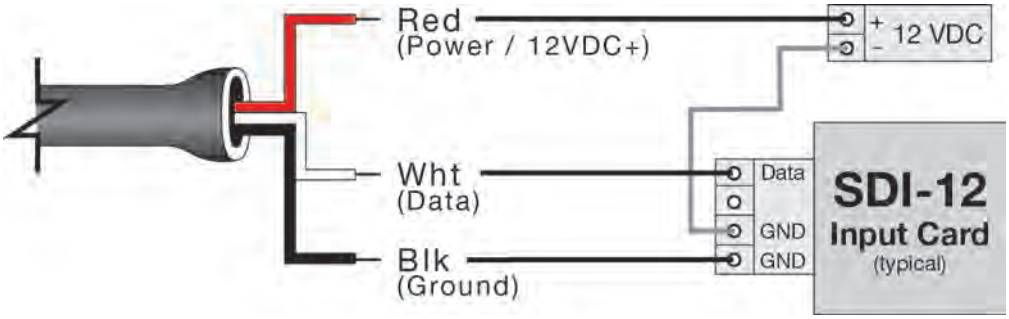

DISPLAY MODELS – SDI-12 WIRING

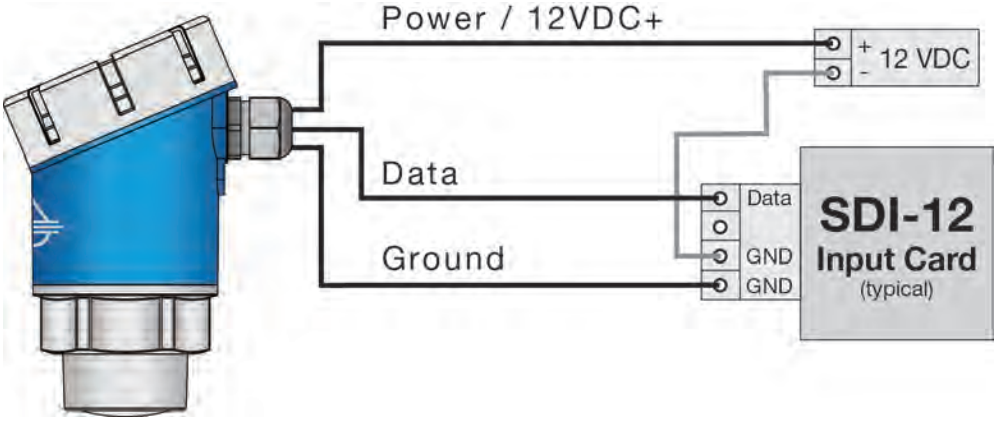

Note: The transmitter should be wired with shielded 3-conductor cable (16 to 22 AWG) to protect from electromagnetic interference. If using a liquid tight connector, select a cable with an outer diameter that is designed to ensure an effective seal with the connector [typically between 0.20" to 0.35" (5 to 9 mm)].

DOWNLOADING THE LEVELTAP™ APP

EchoBeam® is configured through the LevelTap™ App, an application-based software program that uses Bluetooth to communicate with EchoBeam® via your smartphone or tablet. LevelTap™ is downloaded via the App Store for iOS and iPadOS operating systems, and Google Play for the Android operating system.

Download on the App Store

GET IT ON Google Play

CONNECTING ECHOBEAM® TO THE LEVELTAP™ APP

When accessing LevelTap™, you will initially see a list of sensors that are connected or paired, as well as any unpaired sensors. Prior to your first sensor configuration, the screen will only show powered sensors that are unpaired. If there are no sensors powered on, then the screen will not show any sensors. After installing LevelTap™, the next step is to power on the sensor you want to pair with the App. Wait until the sensor appears under Unpaired Sensors, and then tap on the sensor shown. Finally enter the Sensor PIN code that is located on the sensor label to pair the sensor with the App. When paired, the sensor will appear under Paired Sensors.

Note: The Sensor PIN Code is the manufacturer's date code located on the label of EchoBeam® (see below).

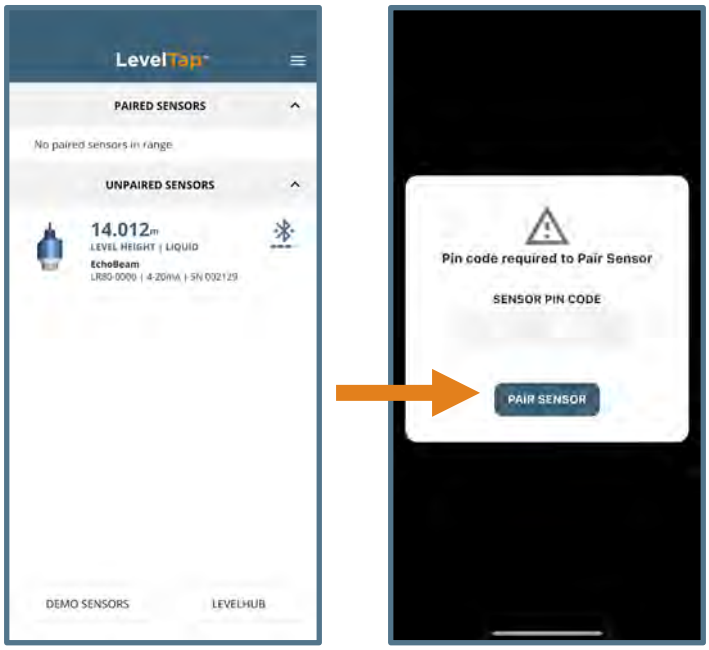

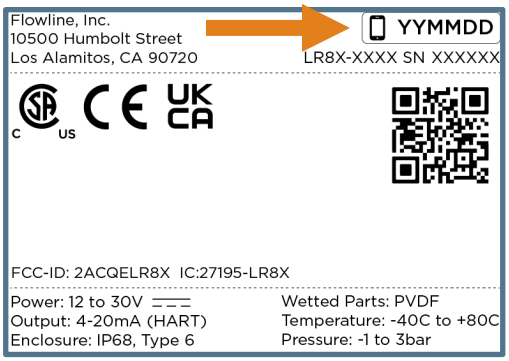

BLUETOOTH CONNECTION

A Smartphone with the LevelTap™ App as used to configure and communicate with the EchoBeam® transmitter. The Bluetooth signal has a maximum range of 26 feet (8m) under ideal conditions (direct line of sight without obstructions). Line of sight will result in the best connection, especially when close to the maximum range of the Bluetooth signal.

Note: The transmitter must be powered for the Bluetooth to function. Refer to the part number to confirm the correct VDC power required for the EchoBeam®.



USING THE LEVELTAP™ APP

From the Main Device Screen, pressing on any of the sensors will jump to the Configuration Setup Options Screen. To set up a transmitter, select one of the three setup options: Step-by-Step Configuration, Quick Adjust or Advanced. For first time configuration, we suggest using the Step-by-Step Configuration method. If you need to make any changes later, then we suggest using the Quick Adjust method.

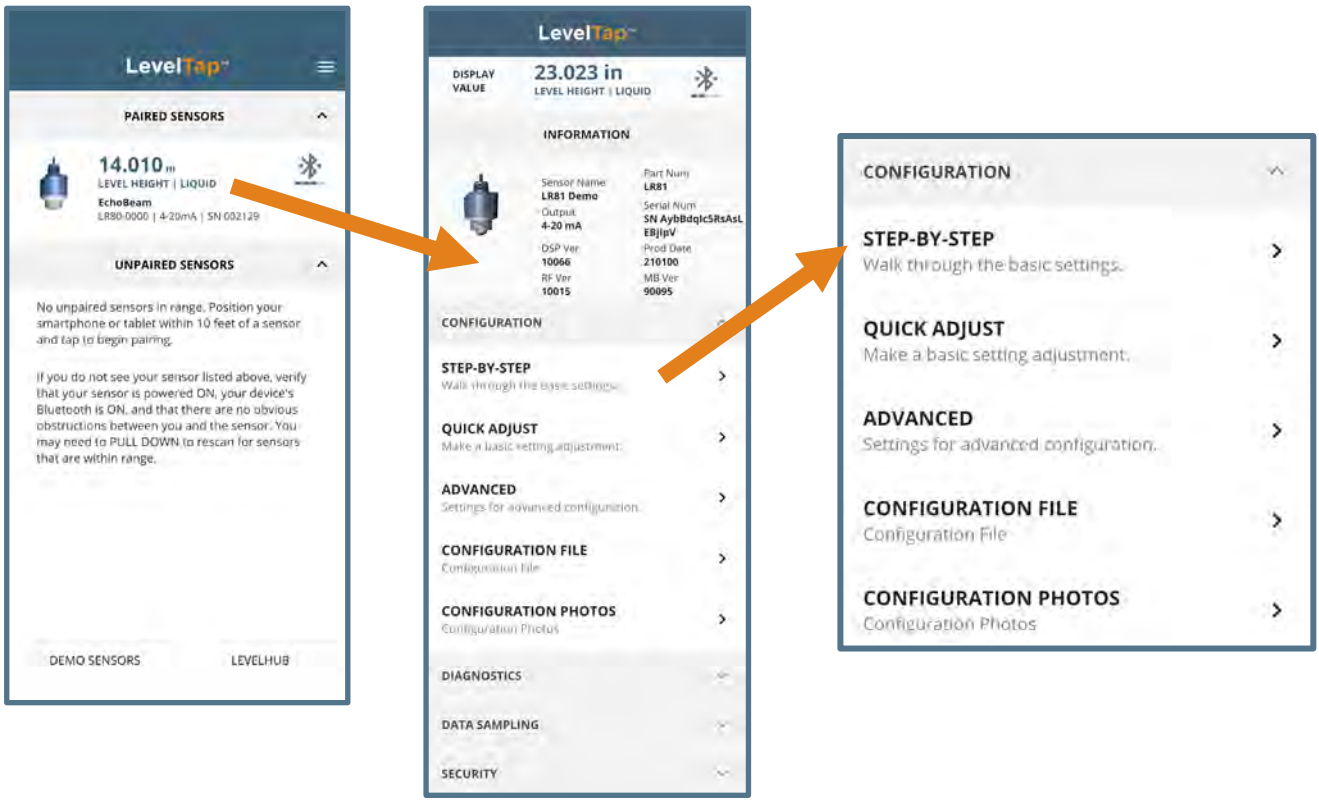

MEASURE THE TANK (BASIC DIMENSIONS)

EchoBeam® measures the distance between the sensor and the liquid or solids surface below. Measuring the tank is one of the most important aspects in configuring the transmitter. When measuring the tank, consider the location of the transmitter with respect to fittings, risers, dome tops and bottoms, and identify where the measurements are taken from the transmitter. The basic measurements for configuration are described to the right:

- Sensor Height
- Fill-Height

All measurements are made from the bottom of the tank up to the bottom of the sensor (Sensor Height) or to the operational full for the tank (Fill-Height).

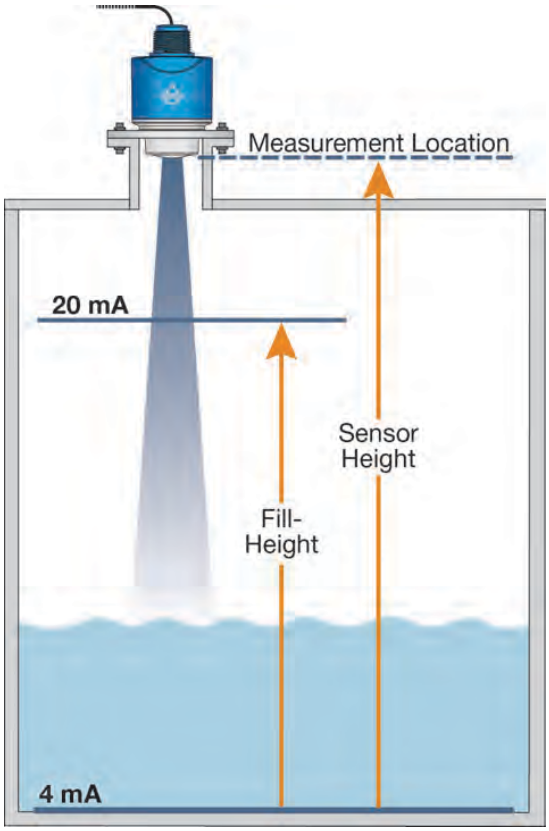

CONFIRM THE TANK MEASUREMENTS

All measurements with EchoBeam® are referenced from the bottom of the transmitter. Once the transmitter has been installed, you may need to adjust your original measurements due to the location of the EchoBeam® in the application. Shown below are the offsets from the bottom of the EchoBeam® to the top of the mounting threads. Use the offsets to calculate the exact location of the transmitter's point of measurement.

LR80 & LR81 Series



LR83 Series

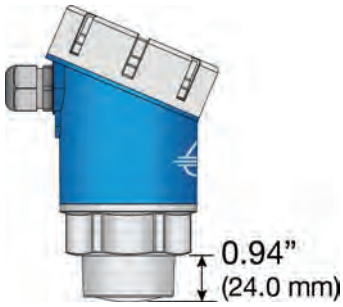

LR85 Series



STEP-BY-STEP CONFIGURATION

Use this option for first time configurations. This method will walk you through all the information needed to configure your transmitter.

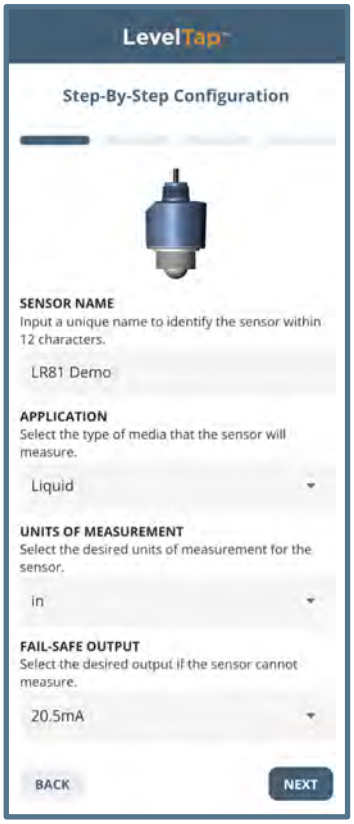

Step 1 – Basic Settings

Enter the following information:

- **Sensor Name**

  Input a unique name to identify the sensor (location, tank and/or media) within 12 characters.

- **Application**

  Select the type of media (liquid or solids) that the sensor will measure.

- **Units of Measurement**

  Select the desired units of measurement (inches, feet, millimeters, centimeters or meters) for the sensor.

- **Fail-Safe Output**

  Select the desired output if the sensor cannot measure a valid signal return or level (3.8mA, 20.5mA, 21.5mA or Hold Last Value).

Step 2 – Set the Sensor Height (4mA)

- Input the distance from the bottom of the tank to the bottom of the sensor, which defines the 4mA set point.

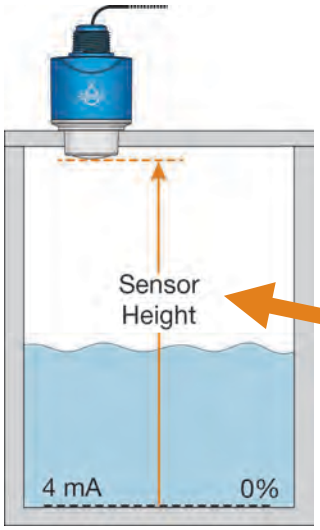

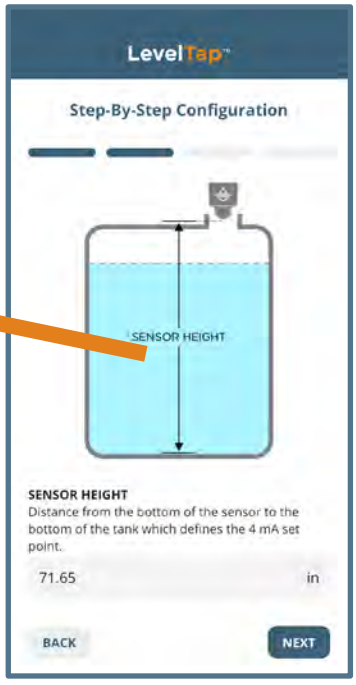

STEP BY STEP CONFIGURAITON (CONTINUED)

Step 3 – Set the Fill-Height (20mA)

- Input the distance from the bottom of the tank to the maximum fill level, which defines the 20mA set point.

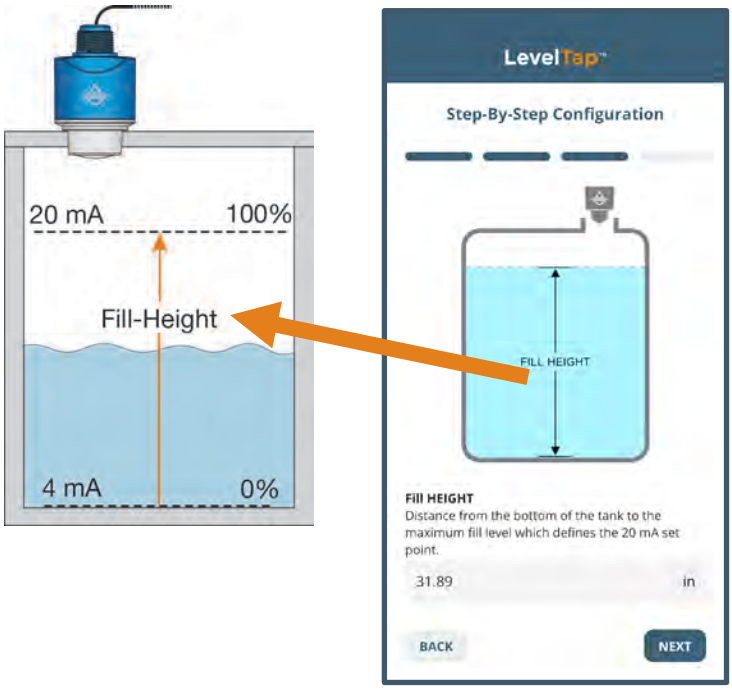

Step 4 - Set the Display Value

- Select the level height, air gap distance, current or percent of span value that the sensor will display.

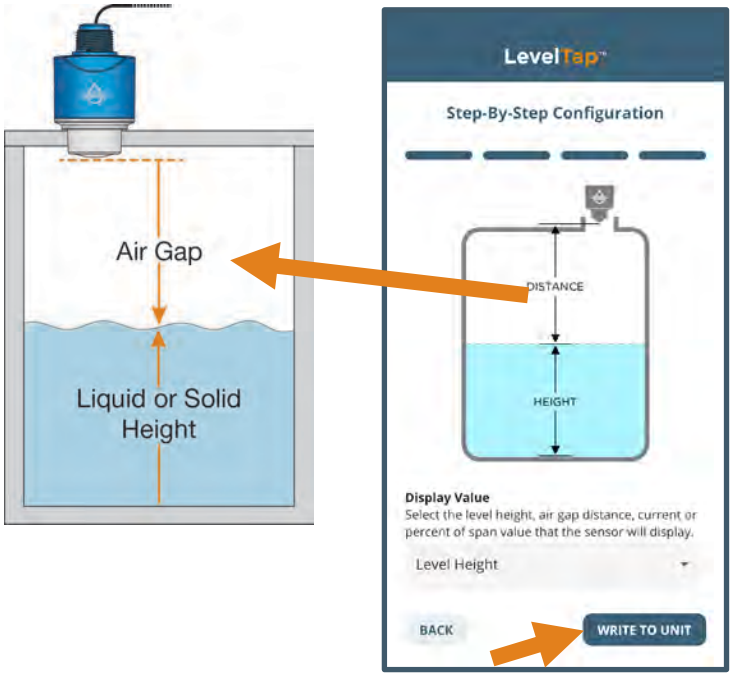

Press **WRITE TO UNIT** to save these settings in the transmitter. At this point, the EchoBeam® is configured to provide a 4-20mA signal proportional to the level in your tank.

Note: The Dead Band and Maximum Range are automatically set based on the Sensor Height and Fill-Height. After writing to unit, the new Sensor Height and Fill-Height, the dead band is set to 0.9 x (Sensor Height – Fill-Height) and the Maximum range is set to 1.05 x (Sensor Height).

CHECK THE ECHOCURVE

This function graphically displays the primary echo return(s) the transmitter sees, the location and amplitude of the return(s), and the numeric air gap distance from the bottom of the transmitter to the level below.

Note: This step should only be performed after having completed the prior four configuration steps and with the transmitter installed on the tank.

Step 5 – Check the EchoCurve



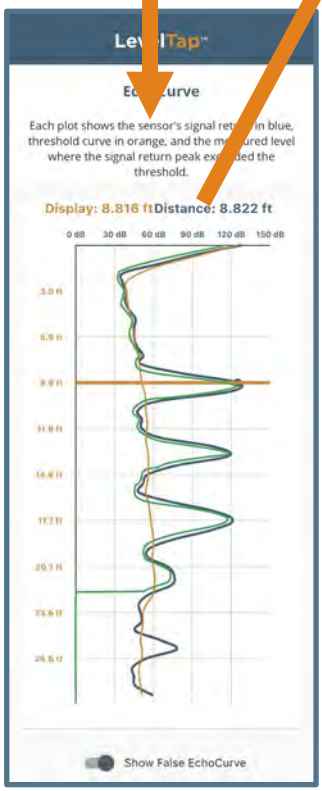

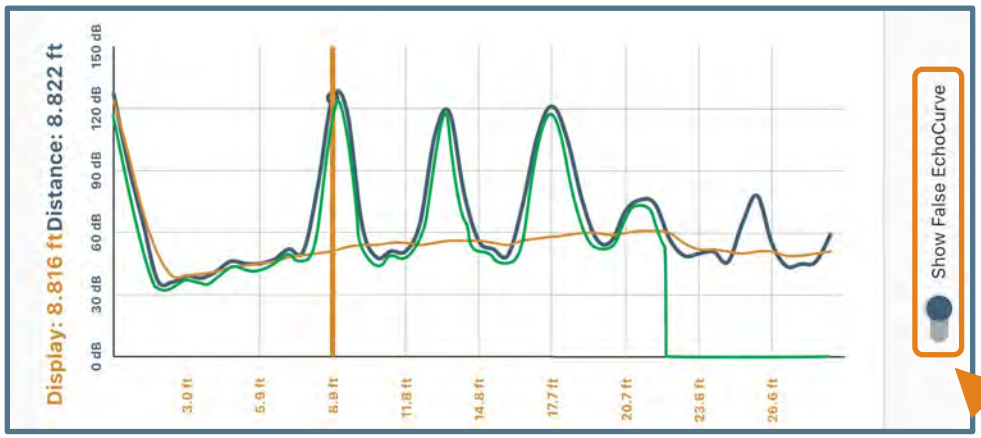

- **Vertical Axis (Y-axis)** – Provides the strength of the signal being measured by the radar transmitter. The value is in units of decibels (dB).
- **Horizontal Axis (X-axis)** – Provides the distance away from the bottom of the radar transmitter. The value is in units of length (i.e., Feet, Meters, etc.)

  As you move from left to right, you are moving further away from the bottom of the transmitter.
- **Orange Vertical Line** – Represents the location of the echo away from the sensor (confirmed by the Display Value and Distance Value).
- **Blue Line** - Represents the actual EchoCurve with the largest peak being the liquid or solid level.

  Always check to see if the peak matches the location of the level.
- **Orange Line** – Represents the threshold used to filter out false signals.

  This is the baseline that is used to identify a potential level reading.

  Any signal below this line will be ignored while any signal above the line is a potential level reading.
- **Green Line** – Represents the False EchoCurve (when selected).

  Creating a False EchoCurve will help to filter out potential false signals and will improve the performance of EchoBeam®.

Note: If there are multiple returns above the Orange Line, it is suggested to Create a False EchoCurve (go to **Section Eleven, Diagnostics**).

TÉLÉCHARGEMENT DE L'APPLICATION LEVELTAP™

EchoBeam® se configure via l'application LevelTap™, un logiciel qui utilise la technologie Bluetooth pour communiquer avec EchoBeam® depuis votre smartphone ou votre tablette. L'application LevelTap™ est téléchargeable sur l'App Store pour les systèmes d'exploitation iOS et iPadOS, et sur Google Play pour le système d'exploitation Android.

Download on the App Store

GET IT ON Google Play

CONNEXION D'ECHOBEAM® À L'APPLICATION LEVELTAP™

Lorsque vous accédez à LevelTap™, vous verrez initialement une liste des capteurs connectés ou appairés, ainsi que les capteurs non appairés. Avant la première configuration d'un capteur, l'écran n'affichera que les capteurs sous tension et non appairés. Si aucun capteur n'est sous tension, l'écran n'affichera aucun capteur. Après l'installation de LevelTap™, l'étape suivante consiste à mettre sous tension le capteur que vous souhaitez appairer avec l'application. Attendez que le capteur apparaisse dans la liste des capteurs non appairés, puis appuyez dessus. Enfin, saisissez le code PIN du capteur, indiqué sur l'étiquette du capteur, pour l'appairer avec l'application. Une fois appairé, le capteur apparaîtra dans la liste des capteurs appairés.

Remarque: Le code PIN du capteur correspond au code de date du fabricant, situé sur l'étiquette de l'EchoBeam® (voir ci-dessous).

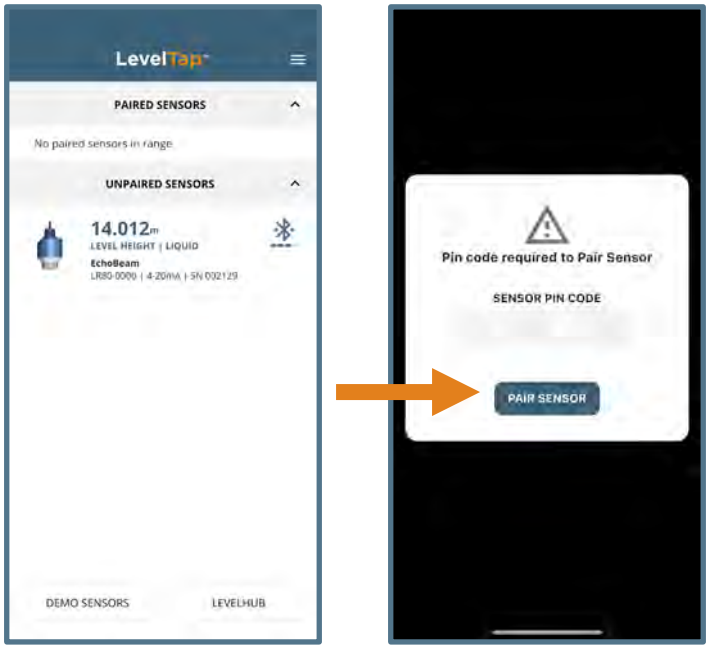

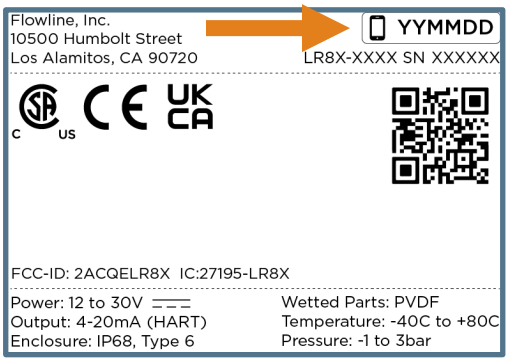

CONNEXION BLUETOOTH

A Smartphone with the LevelTap™ App as used to configure and communicate with the EchoBeam® transmitter. The Bluetooth signal has a maximum range of 26 feet (8m) under ideal conditions (direct line of sight without obstructions). Line of sight will result in the best connection, especially when close to the maximum range of the Bluetooth signal.

Note: The transmitter must be powered for the Bluetooth to function. Refer to the part number to confirm the correct VDC power required for the EchoBeam®.



UTILISATION DE L'APPLICATION LEVELTAP™

Depuis l'écran principal de l'appareil, appuyer sur l'un des capteurs permet d'accéder à l'écran des options de configuration. Pour configurer un transmetteur, sélectionnez l'une des trois options de configuration : Configuration pas à pas, Réglage rapide ou Avancé. Pour une première configuration, nous vous recommandons d'utiliser la méthode de configuration pas à pas. Si vous devez apporter des modifications ultérieurement, nous vous conseillons d'utiliser la méthode de réglage rapide.

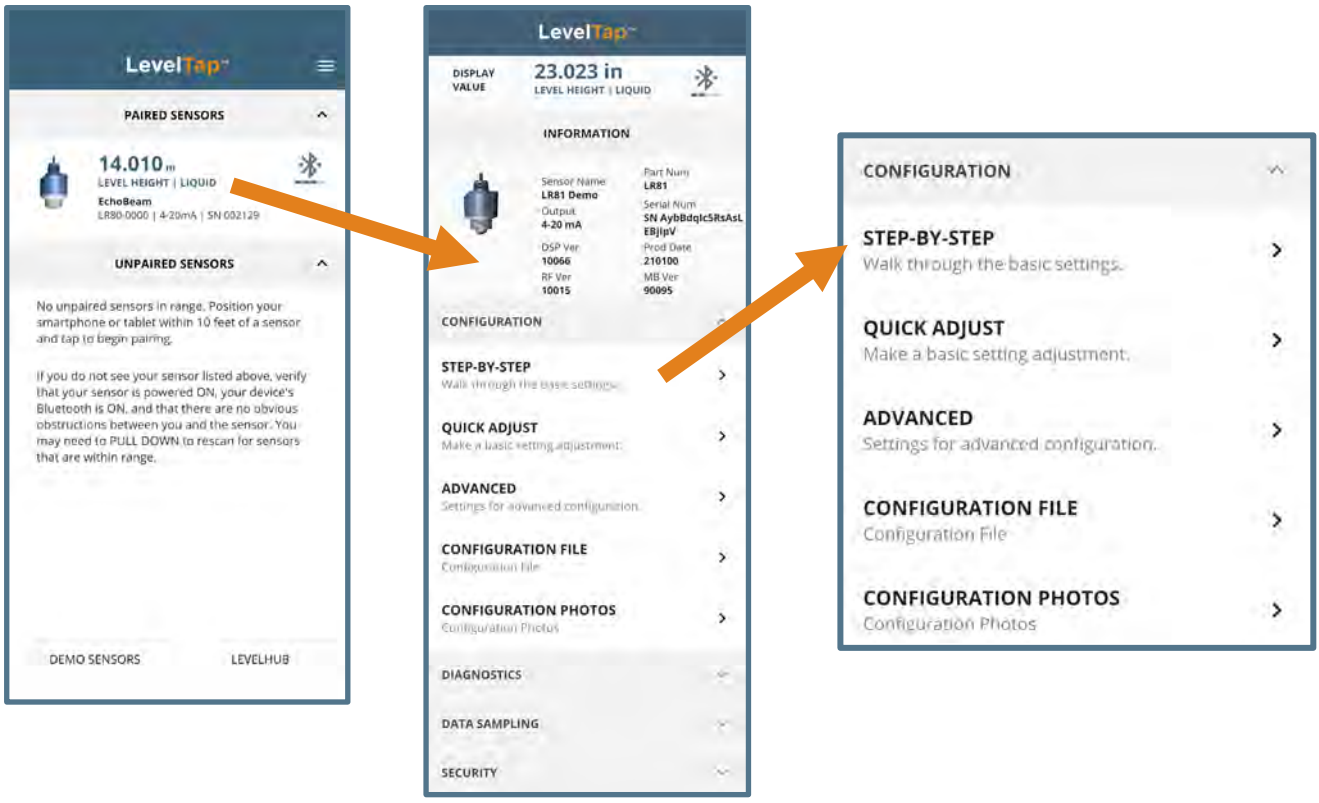

MESUREZ LE RÉSERVOIR (DIMENSIONS DE BASE)

EchoBeam® mesure la distance entre le capteur et la surface du liquide ou des solides en dessous. La mesure du réservoir est l'un des aspects les plus importants de la configuration de l'émetteur. Lors de la mesure du réservoir, tenez compte de l'emplacement de l'émetteur par rapport aux raccords, aux colonnes montantes, aux fonds et aux dômes, et identifiez le point de mesure à partir de l'émetteur. Les mesures de base pour la configuration sont décrites ci-contre:

- Hauteur du capteur
- Hauteur de remplissage

Toutes les mesures sont effectuées depuis le fond du réservoir jusqu'au bas du capteur (hauteur du capteur) ou jusqu'au niveau de remplissage maximal du réservoir (hauteur de remplissage)

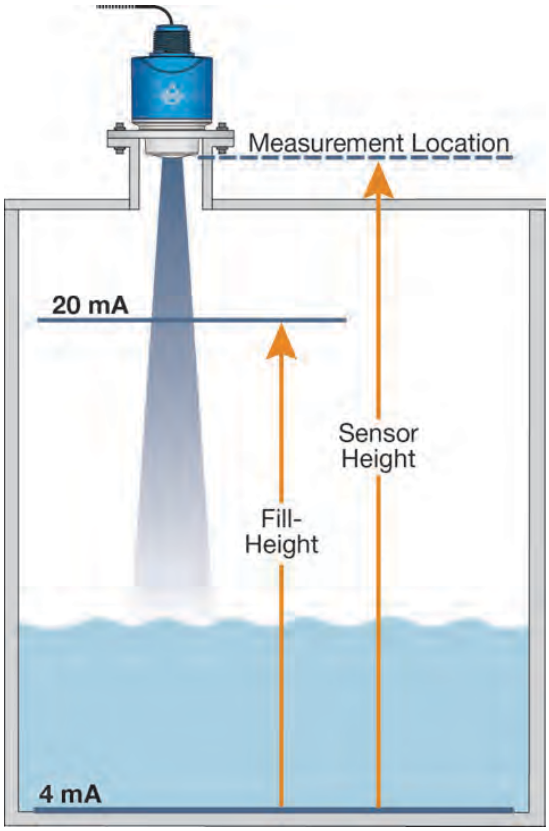

CONFIRMEZ LES DIMENSIONS DU RÉSERVOIR

Toutes les mesures effectuées avec EchoBeam® sont prises à partir de la base de l'émetteur. Une fois l'émetteur installé, il peut être nécessaire d'ajuster vos mesures initiales en fonction de l'emplacement d'EchoBeam® dans l'application. Les décalages entre la base d'EchoBeam® et le sommet des filetages de fixation sont indiqués ci-dessous. Utilisez ces décalages pour calculer l'emplacement exact du point de mesure de l'émetteur.

LR80 & LR81 Series



LR83 Series

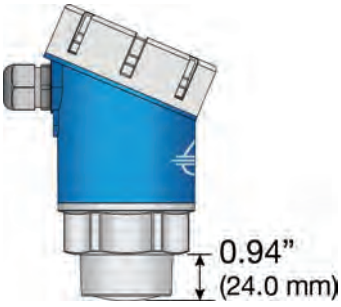

LR85 Series



CONFIGURATION ÉTAPE PAR ÉTAPE

Utilisez cette option pour les premières configurations. Cette méthode vous guidera à travers toutes les informations nécessaires pour configurer votre émetteur.



Étape 1 – Paramètres de base

Saisissez les informations suivantes :

- **Nom du capteur**

  Saisissez un nom unique (12 caractères maximum) pour identifier le capteur (emplacement, réservoir et/ou fluide).

- **Application**

  Sélectionnez le type de fluide (liquide ou solide) que le capteur mesurera.

- **Unités de mesure**

  Sélectionnez les unités de mesure souhaitées (pouces, pieds, millimètres, centimètres ou mètres) pour le capteur.

- **Sortie de sécurité**

  Sélectionnez la sortie souhaitée si le capteur ne parvient pas à mesurer un signal ou un niveau valide (3,8 mA, 20,5 mA, 21,5 mA ou Maintien de la dernière valeur).

Étape 2 – Réglage de la hauteur du capteur (4 mA)

- Saisissez la distance entre le fond de la cuve et le bas du capteur, qui définit le point de consigne de 4 mA.

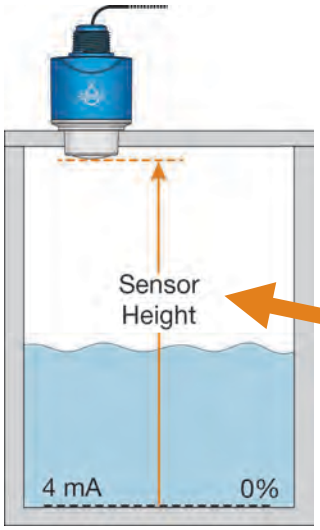

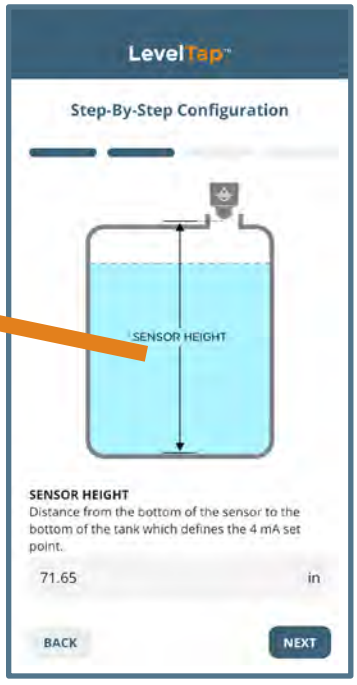

CONFIGURATION ÉTAPE PAR ÉTAPE (SUITE)

Étape 3 – Réglage de la hauteur de remplissage (20 mA)

- Saisissez la distance entre le fond du réservoir et le niveau de remplissage maximal, qui définit le point de consigne de 20 mA.

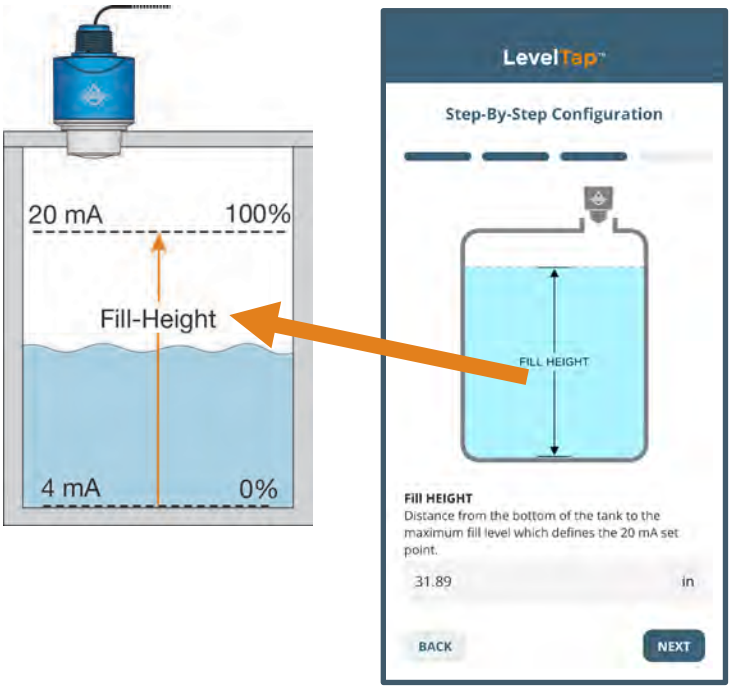

Étape 4 - Définir la valeur d'affichage

- Sélectionnez la hauteur du niveau, la distance de l'entrefer, le courant ou le pourcentage de la plage de mesure que le capteur affichera.

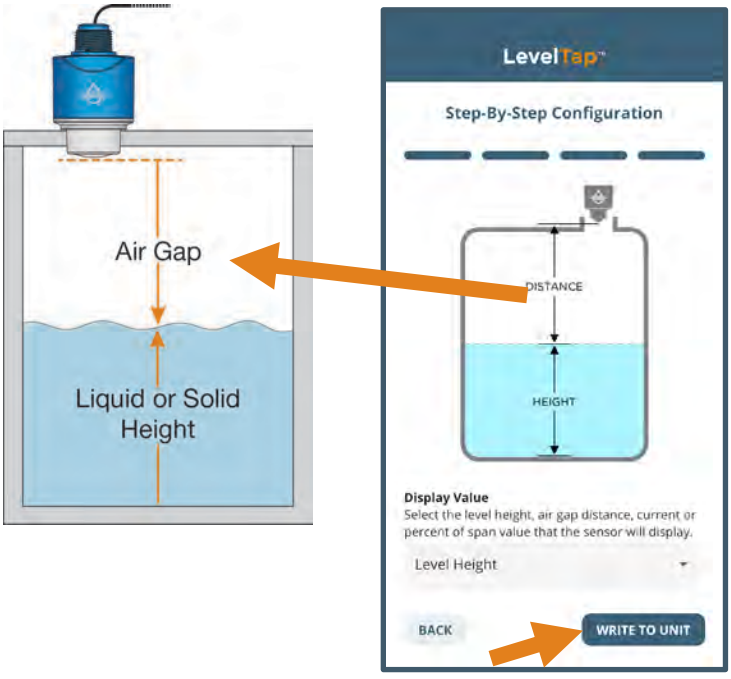

Appuyez sur **ÉCRIRE SUR L'APPAREIL** pour enregistrer ces paramètres dans l'émetteur. À ce stade, l'EchoBeam® est configuré pour fournir un signal 4-20 mA proportionnel au niveau dans votre réservoir.

Remarque: La zone morte et la portée maximale sont automatiquement définies en fonction de la hauteur du capteur et du niveau de remplissage. Après l'enregistrement des paramètres, la zone morte est définie à 0,9 x (hauteur du capteur – niveau de remplissage) et la portée maximale à 1,05 x (hauteur du capteur).

VÉRIFIEZ LA COURBE D'ÉCHO

Cette fonction affiche graphiquement le ou les échos principaux détectés par l'émetteur, leur position et leur amplitude, ainsi que la distance numérique de l'entrefer entre le bas de l'émetteur et le niveau inférieur.

Remarque: Cette étape ne doit être effectuée qu'après avoir terminé les quatre étapes de configuration précédentes et après avoir installé l'émetteur sur la cuve.

Étape 5 – Vérifiez l'EchoCurve



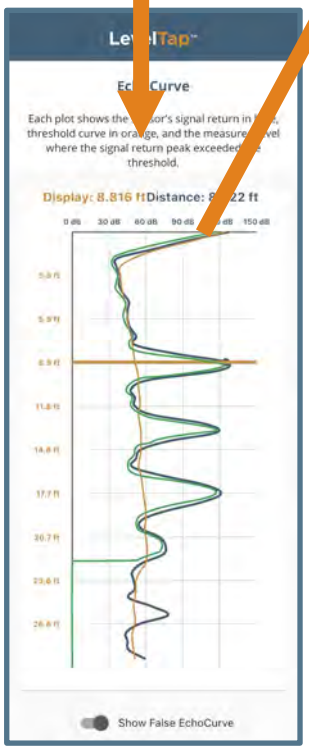

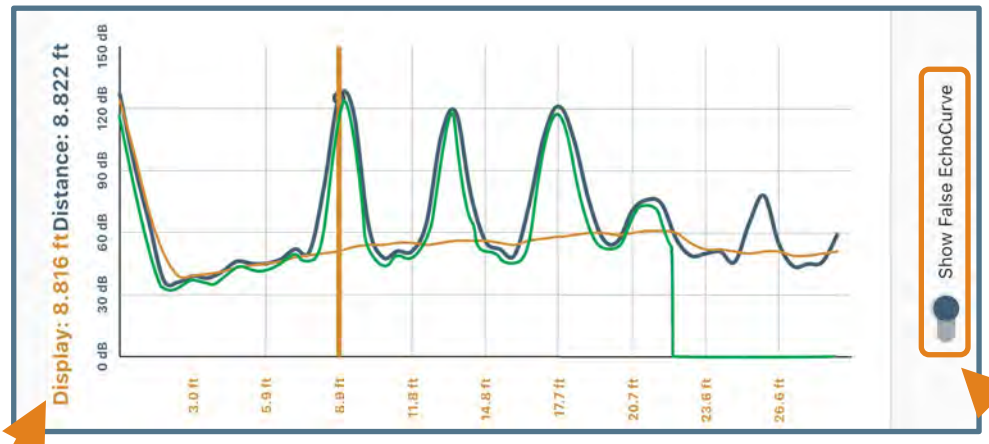

- **Axe vertical (axe Y)** – Représente l'intensité du signal mesuré par l'émetteur radar. La valeur est exprimée en décibels (dB).
- **Axe horizontal (axe des X)** – Indique la distance par rapport à la base de l'émetteur radar. La valeur est exprimée en unités de longueur (par exemple, pieds, mètres, etc.).

  En se déplaçant de gauche à droite, on s'éloigne de la base de l'émetteur.
- **Ligne verticale orange** – Représente l'emplacement de l'écho par rapport au capteur (confirmé par la valeur affichée et la valeur de distance).
- **Ligne bleue** - Représente la courbe EchoCurve réelle, le pic le plus élevé correspondant au niveau du liquide ou du solide.

  Vérifiez toujours que le pic correspond à l'emplacement du niveau.
- **Ligne orange** – Représente le seuil utilisé pour filtrer les faux signaux.

  Il s'agit de la ligne de base utilisée pour identifier une mesure de niveau potentielle.

  Tout signal inférieur à cette ligne sera ignoré, tandis que tout signal supérieur à cette ligne correspond à une mesure de niveau potentielle
- **Ligne verte** – Représente la courbe d'écho parasite (lorsqu'elle est sélectionnée).

  La création d'une courbe d'écho parasite permet de filtrer les faux signaux potentiels et d'améliorer les performances d'EchoBeam®

Remarque: Si plusieurs échos apparaissent au-dessus de la ligne orange, il est conseillé de créer une courbe d'écho fictive (voir la **section onze, Diagnostics**).

Quick Adjust is ideal for making changes to the main level settings. It can also act as a quick configuration method for experienced users of the LevelTap™ App. To access Quick Adjust, open Configuration and then select Quick Adjust.

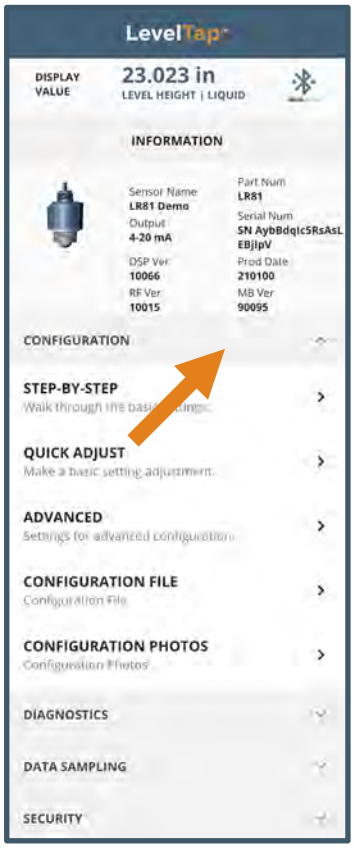

- **Sensor Name**

  Input a unique name to identify the sensor (location, tank and/or media) within 12 characters.

- **Application**

  Select the type of media (liquid or solids) that the sensor will measure.

- **Units of Measurement**

  Select the desired units of measurement (inches, feet, millimeters, centimeters or meters) for the sensor.

- **Fail-Safe Output**

  Select the desired output if the sensor cannot measure a valid signal return or level (3.8mA, 20.5mA, 21.5mA or Hold Last Value).

- **Sensor Height** (4mA):

  Input the distance from the bottom of the tank to the bottom of the sensor, which defines the 4mA set point.

- **Fill-Height** (20mA):

  Input the distance from the bottom of the tank to the maximum fill level, which defines the 20mA set point.

- **Display Value**

  Select the level height, air gap distance, current or percent of span value that the sensor will display.

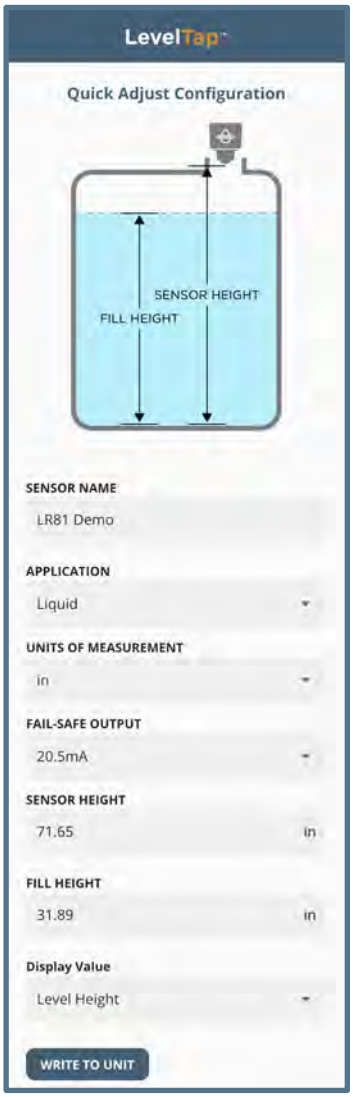

Press **WRITE TO UNIT** to save any changes to the sensor.

Note: The Dead Band and Maximum Range will be automatically set as defined by the settings in Step-by-Step or Quick Adjust. The default setting for Dead Band is 90% of the difference between the Sensor Height and Fill-Height values. The default setting for Maximum Range is 105% of the Sensor Height value.

PROCESS ADJUSTMENTS OVERVIEW

These optional functions are intended to improve transmitter performance in applications with the below process and/or installation characteristics.

The **Advanced Configuration** has four categories for enhancing the performance of EchoBeam® – **Advanced Settings**, **Volumetric Level**, **Flume Flow** and **Weir Flow**.

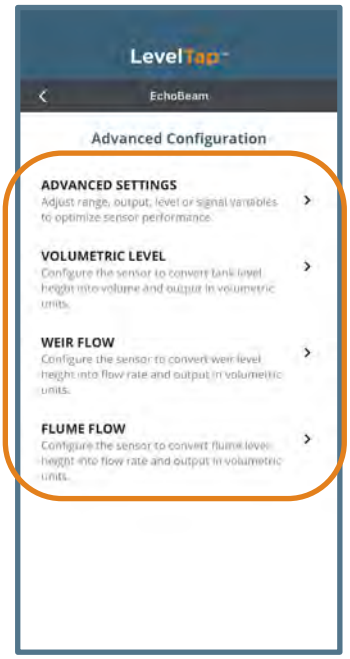

- **Advanced Settings**

  Adjust range, HART, Modbus, SDI-12, application or signal variables to optimize sensor performance.

  Note: HART, Modbus and SDI-12 only appear on units with their respective outputs.

- **Volumetric Level**

  Configure the sensor to convert tank level height into volume and output in volumetric units.

- **Weir Flow**

  Configure the sensor to convert weir level height into flow rate and output in a volumetric flow rate.

- **Flume Flow**

  Configure the sensor to convert flume level height into flow rate and output in a volumetric flow rate.

Note: These adjustments should only be performed if the transmitter is not performing to your satisfaction after having completed the configuration steps with the transmitter installed on the tank, as described in Section Six.

ADVANCED SETTINGS

Advanced Settings have 4 categories (Range Adjust, HART, Level Variables and Signal Properties).

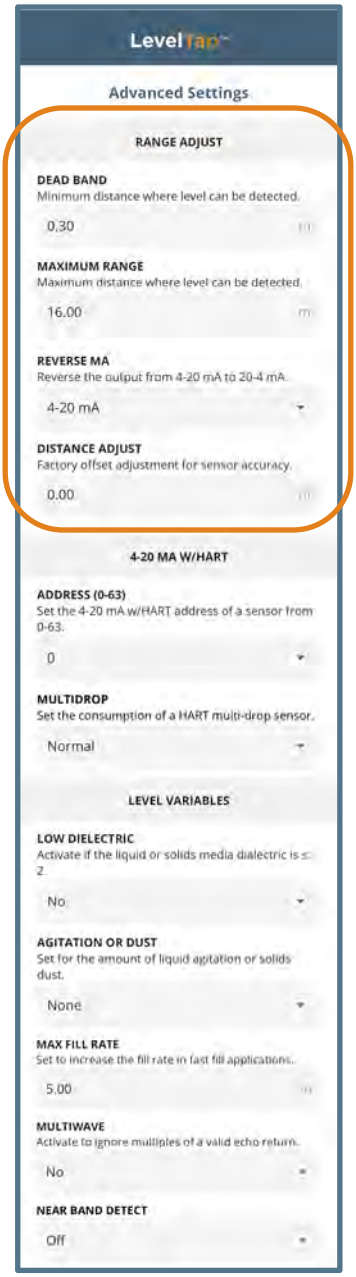

RANGE ADJUST

These settings are used to fine tune EchoBeam®.

- **Dead Band (d)**
  - This setting defines the minimum distance that the EchoBeam® will detect valid echo returns.
  - Value will be in the Units defined in Step 1.
  - EchoBeam® will not read a level above this setting.
  - Default setting will be at 90% of the difference between the Sensor Height and Fill-Height values.
    - If Sensor Height is set to 20 feet and Fill-Height is set to 19 feet, the difference between the two values is 1 foot.
    - 90% of 1 foot is 0.9 feet (set Dead Band to 0.900 feet)

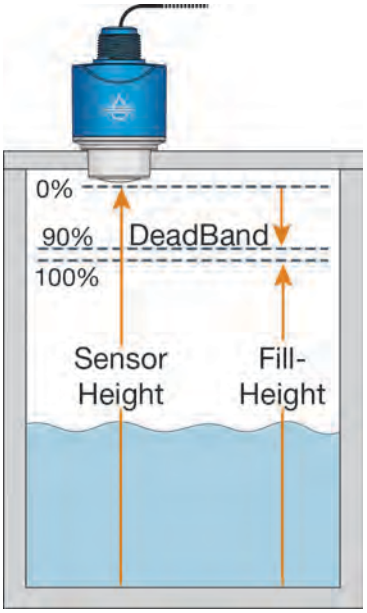

Note: Dead Band is completely independent from the 20mA setting (Fill-Height). If the Dead Band is set below the location of the Fill-Height, then the transmitter will not measure above the Dead Band. The maximum level will not correspond to the current at the Dead Band.

Dead Band Equals Fill-Height

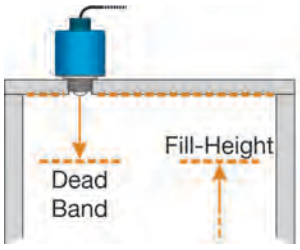

The Dead Band is located at the same level as the Fill-Height setting.

Dead Band Below Fill-Height

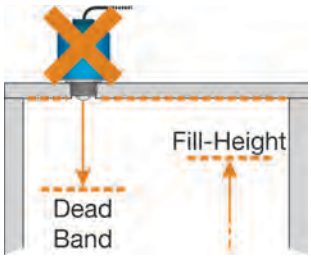

The Dead Band is located at a lower level in the tank with respect to the Fill-Height setting.

Dead Band Above Fill-Height

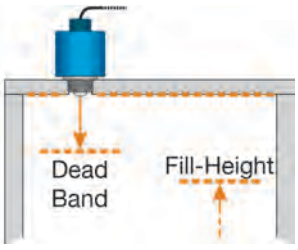

The Dead Band is located at a higher level in the tank with respect to the Fill-Height setting.

Press **WRITE TO UNIT** to save any changes to the sensor.

Press **REVERT** to return all settings under **Advanced Settings** back to Factory Settings.

ADVANCED SETTINGS

Advanced Settings have 4 categories (Range Adjust, HART, Level Variables and Signal Properties).

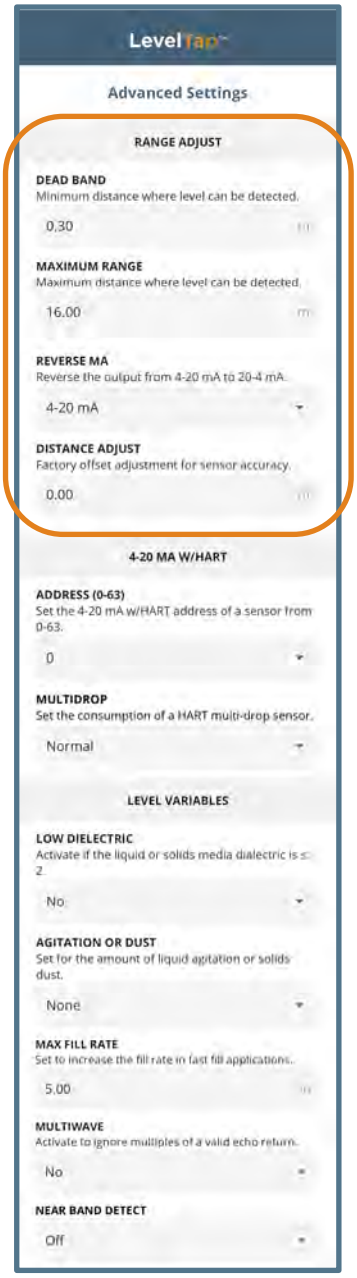

RANGE ADJUST

These settings are used to fine tune EchoBeam®.

- **Maximum Range (d)**
  - This setting defines the maximum distance that the sensor will detect valid echo returns.
  - Value will be in the Units defined in Step 1.
  - EchoBeam® will not read a level beyond this setting.
  - Default setting will be 105% greater than the Sensor Height value.
    - If Sensor Height is set to 20 feet, then Maximum Range default will be equal to 21.0 feet.

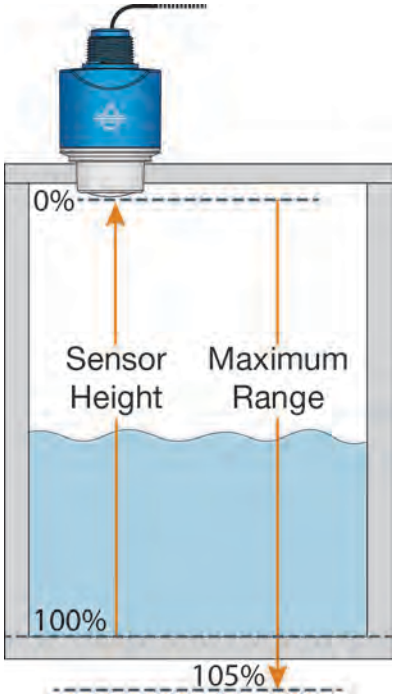

Press **WRITE TO UNIT** to save any changes to the sensor.

Press **REVERT** to return all settings under **Advanced Settings** back to Factory Settings.

ADVANCED SETTINGS

Advanced Settings have 4 categories (Range Adjust, HART, Level Variables and Signal Properties).

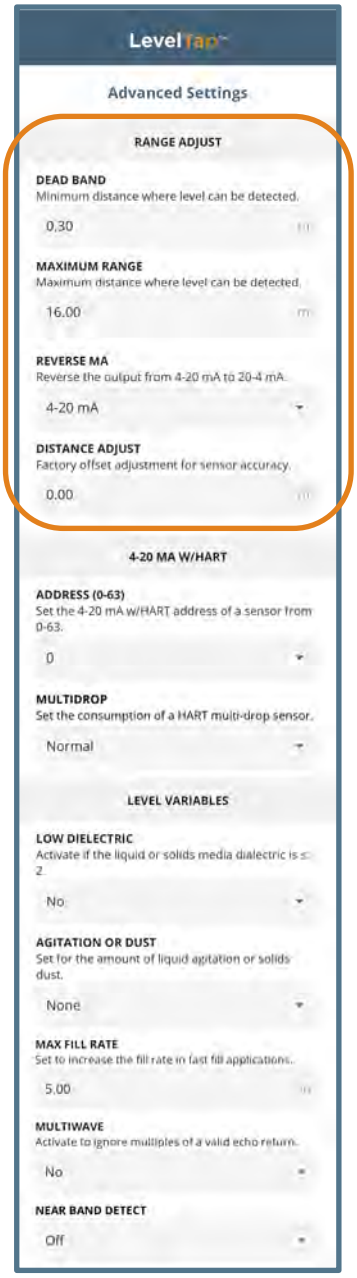

RANGE ADJUST

- **Reverse mA**
  - This setting is used to reverse the 4-20mA span.
  - Default is NO (4mA at bottom of tank and 20mA at top of tank).
  - Set to YES will place 20mA at bottom of tank and 4mA at top of tank.

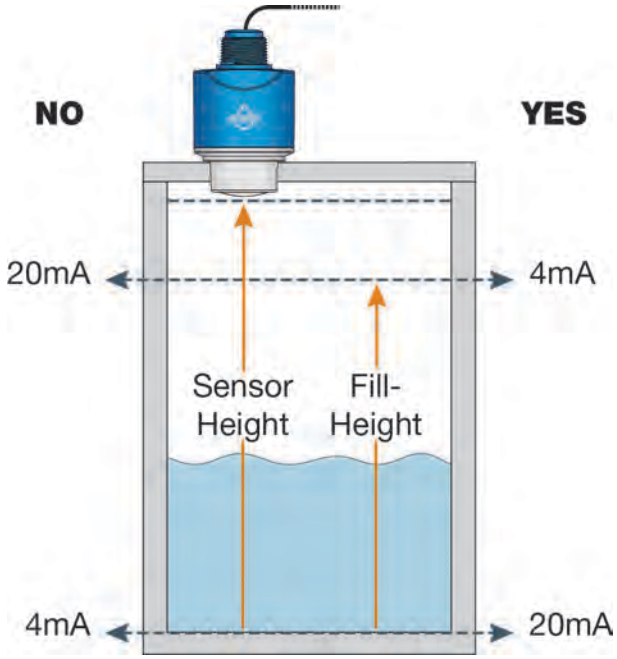

- **Distance Adjust**
  - This setting is used to make an adjustment of a measured value to match the output of the sensor.

Note: This function should only be performed by a trained technician. Never change this setting unless instructed by a Flowline representative.

Note: Record this setting if a Factory Reset is performed

Press **WRITE TO UNIT** to save any changes to the sensor.

Press **REVERT** to return all settings under **Advanced Settings** back to Factory Settings.

ADVANCED SETTINGS

Advanced Settings have 4 categories (Range Adjust, HART, Level Variables and Signal Properties).

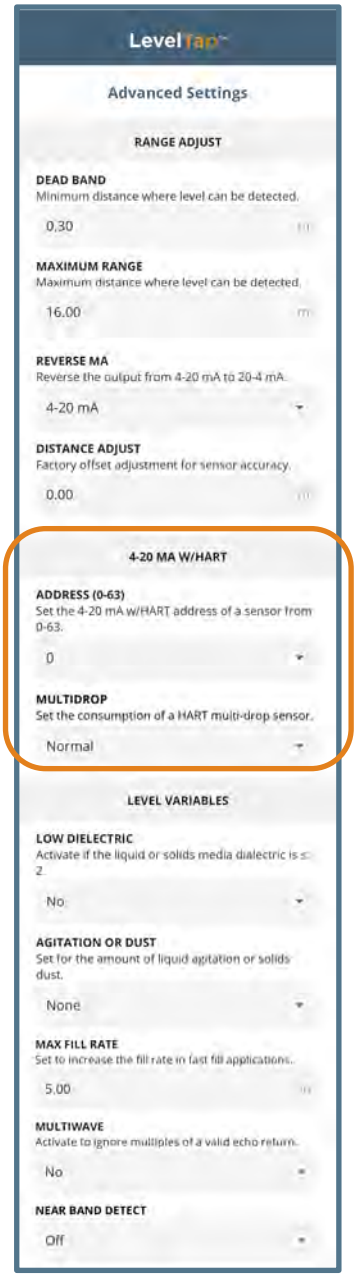

HART OUTPUT

- **Address (0 – 63)**
  - This function allows for the sensor's HART® address to be changed from the Standard mode with an address of 0 to a Multidrop mode where the address can be set from 1 to 63.
  - Default is Address 0.
  - This is used when connecting multiple sensors in the same loop.
  - Each transmitter must have a unique address.

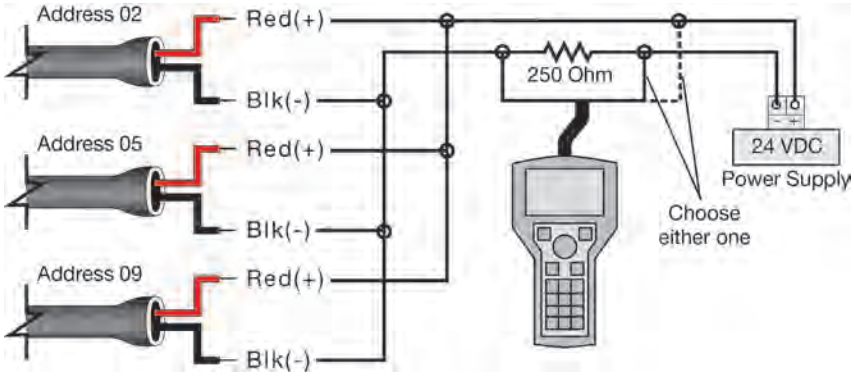

- **Multidrop**
  - This function assigns the current output when address is not "0" (address is 1 to 63).
  - Sensor will hold a steady current of 4mA or 8mA (selectable) when address is set from 1 to 63.
  - If address 0 is selected, the default will be Normal.

HART DEVICE DESCRIPTORS (DD FILES)

EchoBeam® is HART 7.0 certified and can be configured using a HART communicator. The Hart Device Descriptor (DD) files can be found at https://www.flowline.com on the corresponding EchoBeam product pages. From the Flowline home page, select Products > Level Transmitter and select your EchoBeam sensor. Press **HART DD** Files to download and install onto your communicator.

Press **WRITE TO UNIT** to save any changes to the sensor.

Press **REVERT** to return all settings under **Advanced Settings** back to Factory Settings.

ADVANCED SETTINGS

Advanced Settings have 4 categories (Range Adjust, Modbus, Level Variables and Signal Properties).

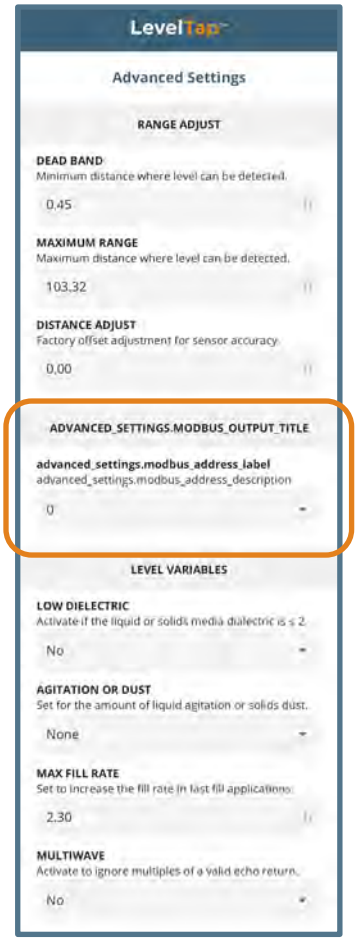

MODBUS OUTPUT

- **Address (0 – 99)**
  - This function allows for the sensor's Modbus address to be changed from the Standard mode with an address of 1 to another address which can be set from 0 to 99.
  - Default is Address 1.
  - This is used when connecting multiple sensors in the same loop.
  - Each transmitter must have a unique address.

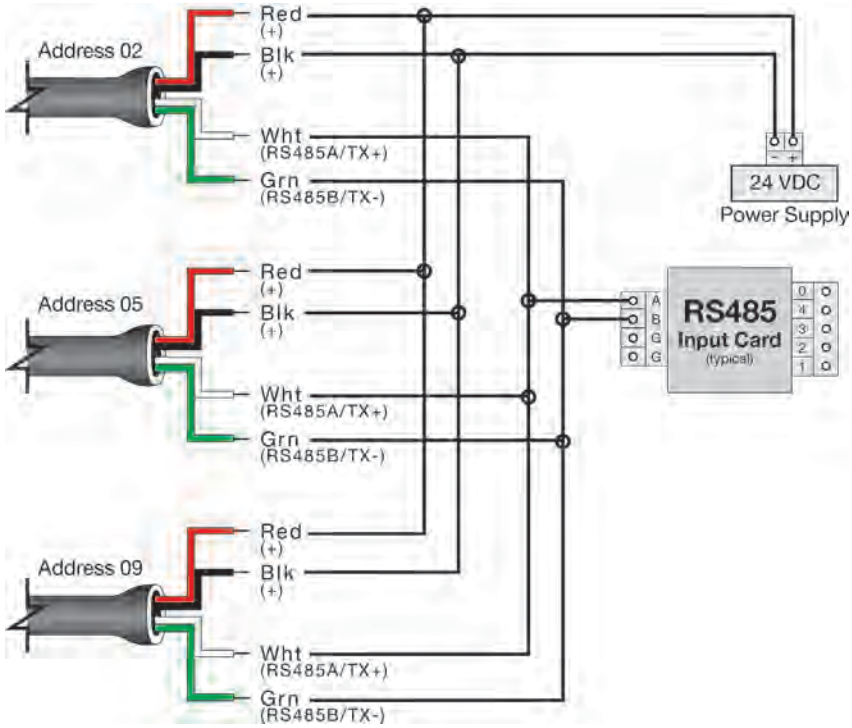

Press **WRITE TO UNIT** to save any changes to the sensor.

Press **REVERT** to return all settings under **Advanced Settings** back to Factory Settings.

ADVANCED SETTINGS

Advanced Settings have 4 categories (Range Adjust, SDI-12, Level Variables and Signal Properties).

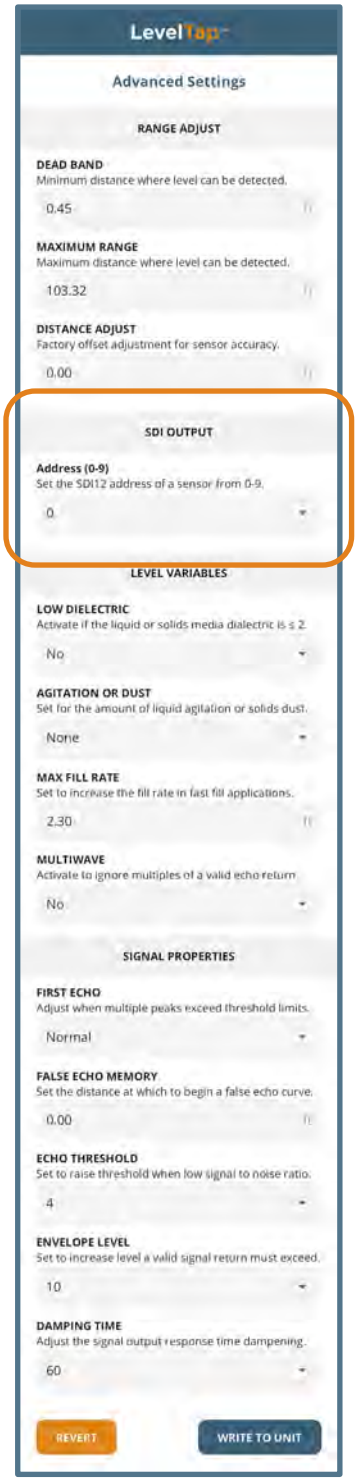

SDI-12 OUTPUT

- **Address (0 – 9)**
  - This function allows for the sensor's SDI-12 address to be changed from the Standard mode with an address of 0 to another address which can be set from 0 to 9.
  - Default is Address 0.
  - This is used when connecting multiple sensors in the same loop.
  - Each transmitter must have a unique address.

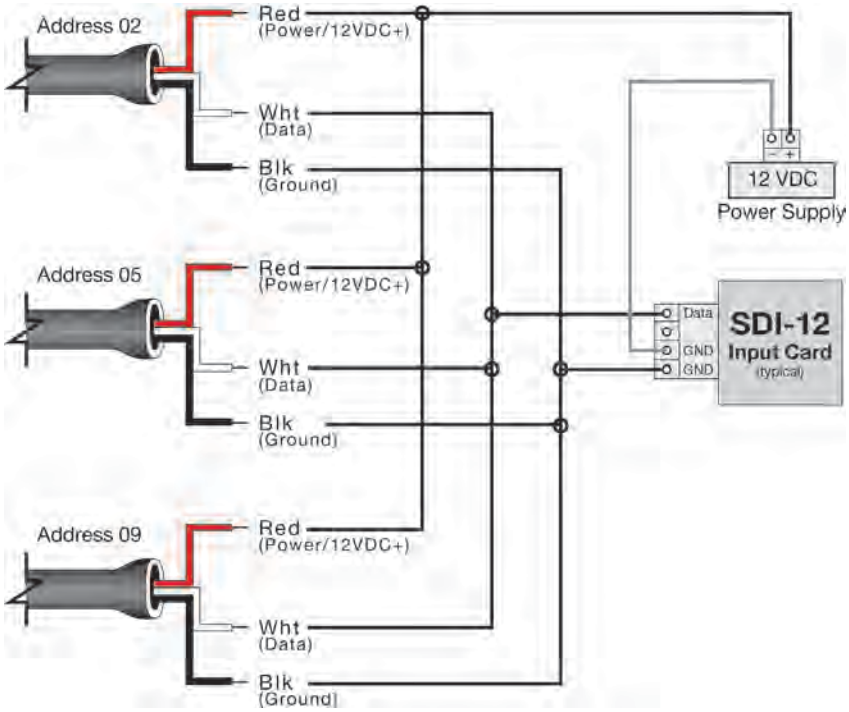

Press **WRITE TO UNIT** to save any changes to the sensor.

Press **REVERT** to return all settings under **Advanced Settings** back to Factory Settings.

ADVANCED SETTINGS

Advanced Settings has 4 categories (Range Adjust, HART, Level Variables and Signal Properties)

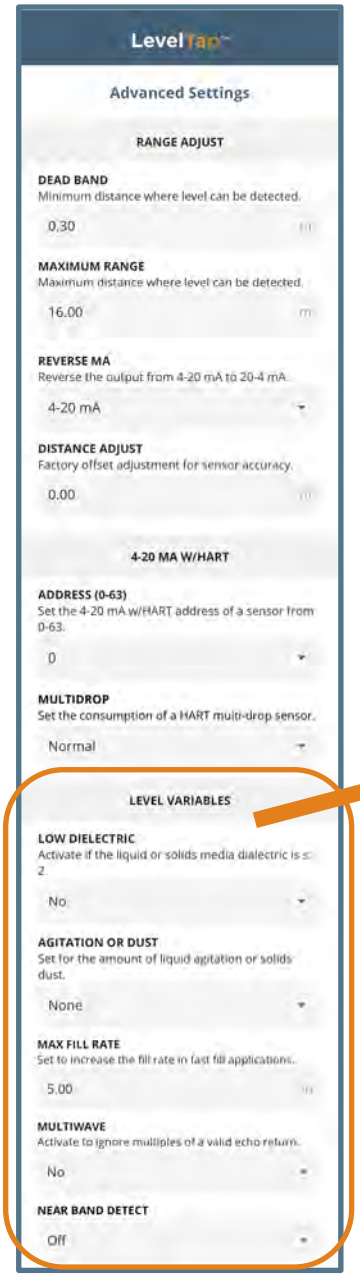

LEVEL VARIABLES

- **Low Dielectric**
  - Used when measuring a medium with a low dielectric constant and the reflection from the bottom of the tank is stronger than the medium reflection.
  - Selections are YES or NO with NO as the default.
    - Selecting YES will open two new fields
    - **Tank Bottom Distance** is typically the same as the Sensor Height setting.
    - **Tank Bottom Area** (**TBA**) is the distance from the tank bottom setting where the sensor will start to output the value of the "upper" level echo and ignore the echo from the bottom of the tank.
      - Default value is 3.28 feet (1m).

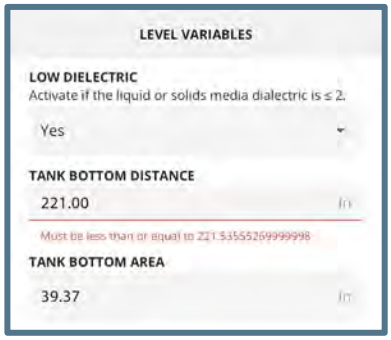

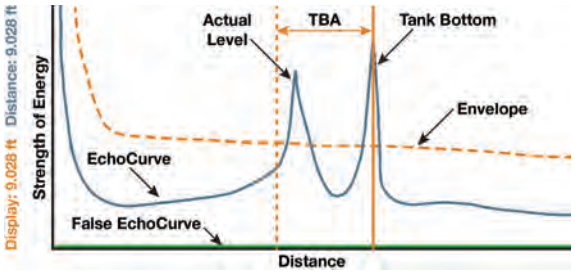

With Low Dielectric ON, the Tank Bottom echo will be ignored.

- **Agitation or Dust**
  - Used when liquid level surface is highly turbulent/agitated or when a large amount of dust is present.
  - While checking EchoCurve, if the intensity of the peak is unstable (jumping up and down), use this feature.
    - When activated, the sensor will ignore the peak and select the starting point of the peak. This will result in a measurement accuracy drop of 10mm to 20mm.
  - Selections are None, Mild, Medium and Strong with None as the default.

Press **WRITE TO UNIT** to save any changes to the sensor.

Press **REVERT** to return all settings under **Advanced Settings** back to Factory Settings.

ADVANCED SETTINGS

Advanced Settings has 4 categories (Range Adjust, HART, Level Variables and Signal Properties)

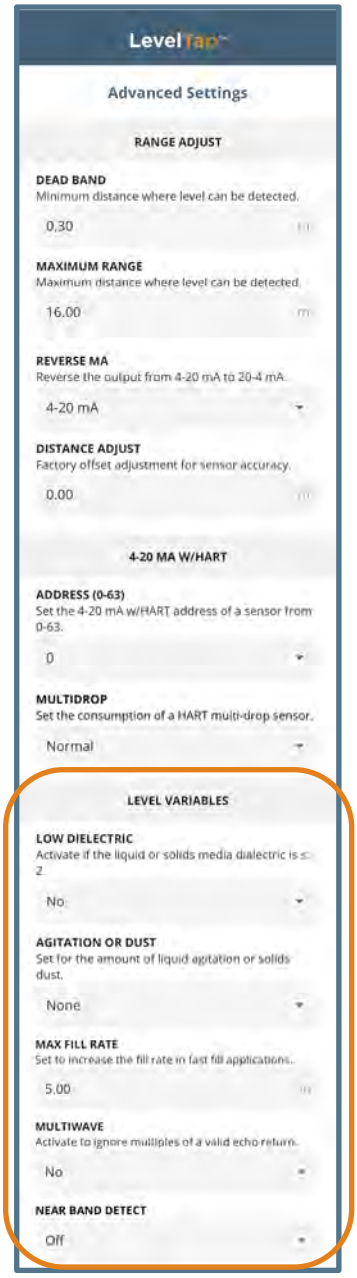

LEVEL VARIABLES

- **Max Fill Rate**
  - Used when the media level rises or falls within the tank is greater than a rate of 1” per second (25.4mm/sec).
  - Selections are based upon the rate (units selected in Step 1 per /second).
- **Multiwave**
  - Used when there are multiple return echoes displayed in the EchoCurve.
  - Selections are YES or NO with NO as the default.

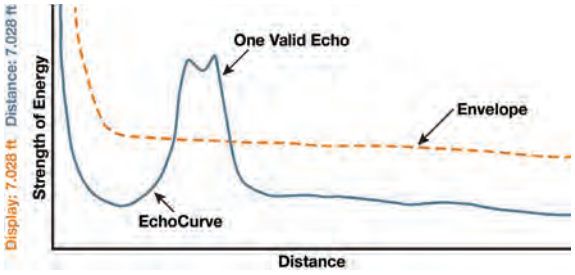

Below is one valid echo that is above the envelop curve and is wide with the actual level being at the highest point (7.028 ft).

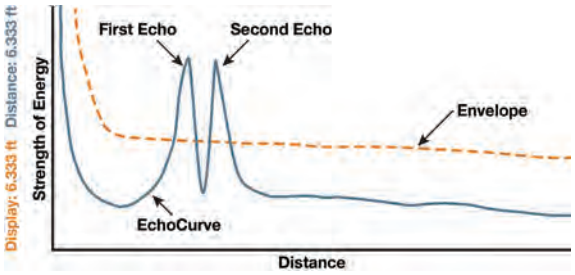

With Multiwave ON, the echo is separated, and the First Echo becomes the actual level distance (6.333 ft).

- **Near Band Detect**
  - Used when EchoBeam is installed in small tanks or when the media is filled close to the sensor face (less than 3.28 feet or 1m).
    - Will reduce the signal strength from EchoBeam.
  - Selections are YES or NO with NO as the default.

Press **WRITE TO UNIT** to save any changes to the sensor.

Press **REVERT** to return all settings under **Advanced Settings** back to Factory Settings.

ADVANCED SETTINGS

Advanced Settings has 4 categories (Range Adjust, HART, Level Variables and Signal Properties)

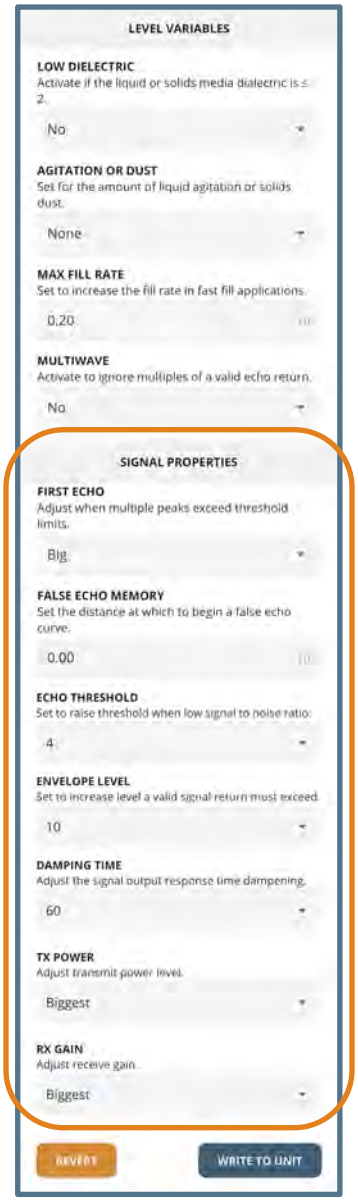

SIGNAL PROPERTIES

- **First Echo**
  - Used when the sensor has difficulty seeing the first echo return.
  - This setting adjusts the peak strength (dB) of the first echo.
  - Default is Normal. The settings are:
    - Normal – No adjustment
    - Small – Amplitude of the first wave decreased by a factor of 0.7.
    - Big – Amplitude of the first wave increased by a factor of 1.2.
    - Bigger – Amplitude of the first wave increased by a factor of 2.
    - Biggest – Amplitude of the first wave increased by a factor of 15.

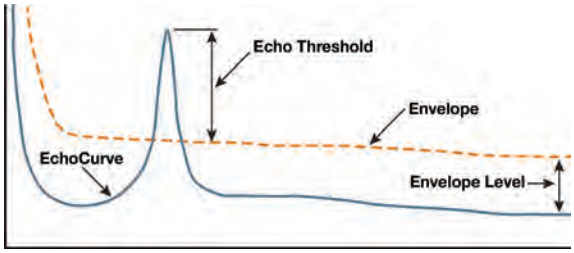

First Echo peak is very strong and can be reduced.

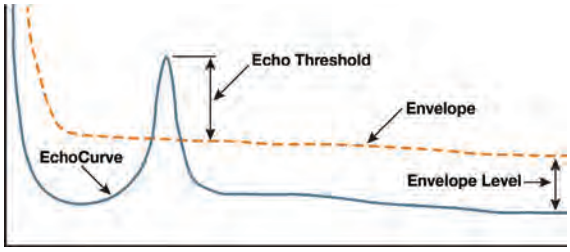

First Echo peak is normal, and no adjustment is required.

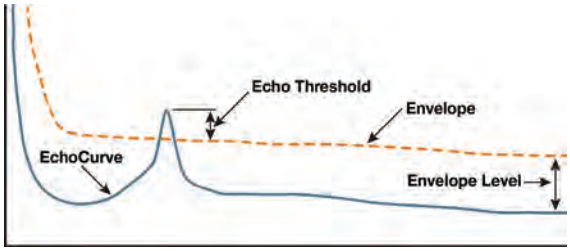

First Echo peak is weak and can be increased.

Press **WRITE TO UNIT** to save any changes to the sensor.

Press **REVERT** to return all settings under **Advanced Settings** back to Factory Settings.

ADVANCED SETTINGS

Advanced Settings has 4 categories (Range Adjust, HART, Level Variables and Signal Properties)

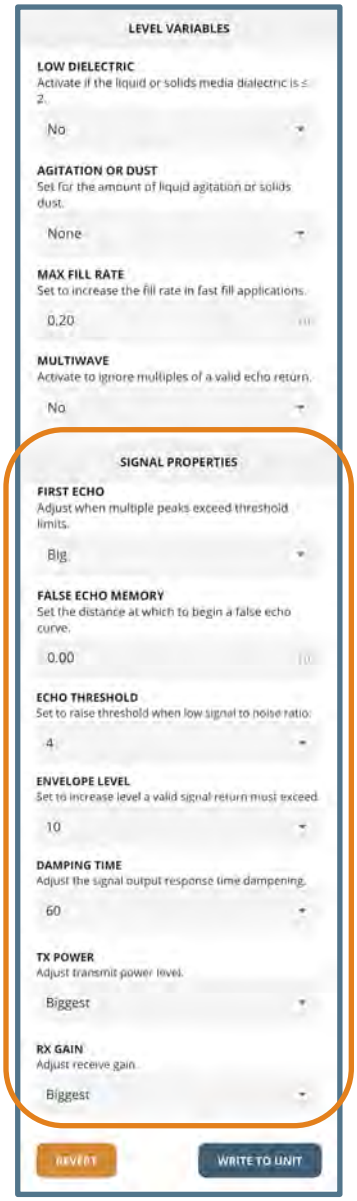

SIGNAL PROPERTIES

- **False Echo Memory**

Performing a False Echo Memory will help the sensor filter out any false signals caused by obstructions (mixer blades, side wall weld joints, fill pipes, etc.) or abnormalities within the measurement range. This function maps all echo returns within the tank, differentiating between actual and false echoes. Echoes identified as false will be stored into the False Echo Memory and will not be considered in the level measurement of liquids or solids.

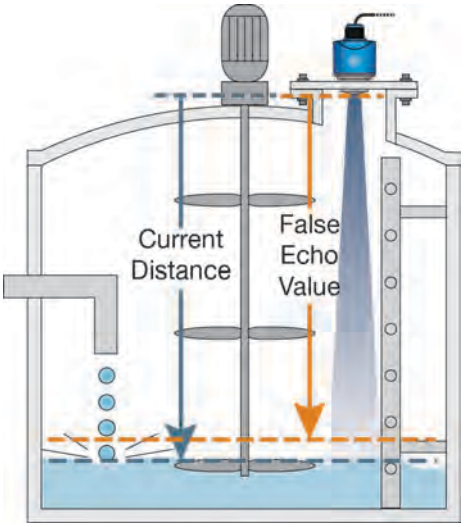

- Default is 0 feet (0m).
- The illustration shows the location of a false echo that is filtered from being considered a valid echo response.
- Measure the current distance of the level from the bottom of the sensor.
- Multiply the **Current Distance** by 0.95 and enter that value as the False Echo Value and press **CREATE** to begin the auto mapping.

Note: To remove or undo the False EchoCurve, enter the value 0.001 and press **CREATE**. This will erase the False EchoCurve.

Press **WRITE TO UNIT** to save any changes to the sensor.

Press **REVERT** to return all settings under **Advanced Settings** back to Factory Settings.

ADVANCED SETTINGS

Advanced Settings has 4 categories (Range Adjust, HART, Level Variables and Signal Properties)

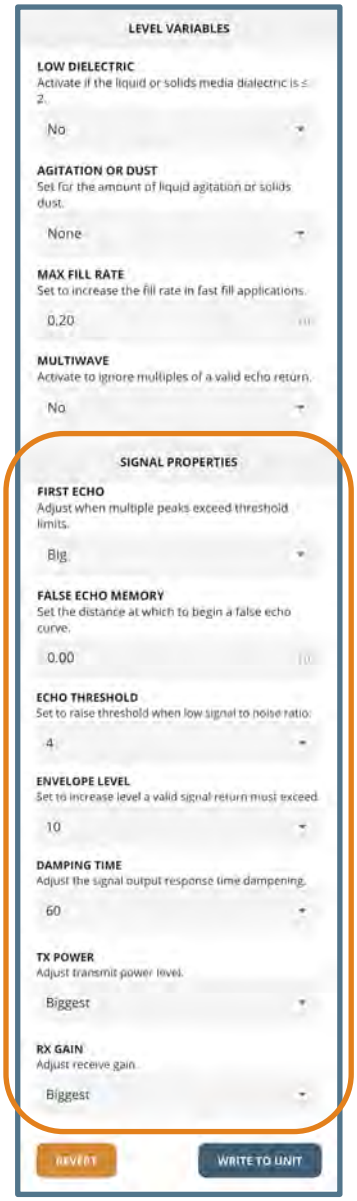

SIGNAL PROPERTIES

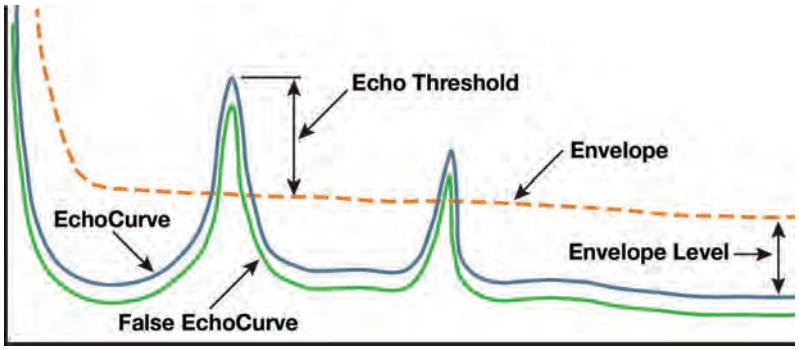

- **Echo Threshold (dB)**
  - Echo Threshold and Envelope Level are both tied to the Envelope.
  - Echo Threshold is the difference the return signal must exceed above the Envelope so that the return signal can be considered a valid level (liquid or solids).
  - Echo Threshold is in units of dB.
  - When the return signal is weak, decreasing the Echo Threshold will help to identify the signal.
- **Envelope Level (dB)**
  - Echo Threshold and Envelope Level are both tied to the Envelope.
  - Envelope Level is the difference between the EchoCurve and the actual Envelop and it adjusts with the shape of the EchoCurve.
  - Envelope Level is in units of dB.
  - When the return signal is competing with other signals, increasing the Envelope level will help to filter out the extra signals.
- **Damping Time (sec)**
  - This function sets the sampling rate for which the sensor updates the current output.
  - The value is entered in seconds with a default of 60 seconds.
    - Decreasing the value will make the output more responsive to level changes.
    - Increasing the value will make the output less responsive to level changes.

Press **WRITE TO UNIT** to save any changes to the sensor.

Press **REVERT** to return all settings under **Advanced Settings** back to Factory Settings.

ADVANCED SETTINGS

Advanced Settings has 4 categories (Range Adjust, HART, Level Variables and Signal Properties)

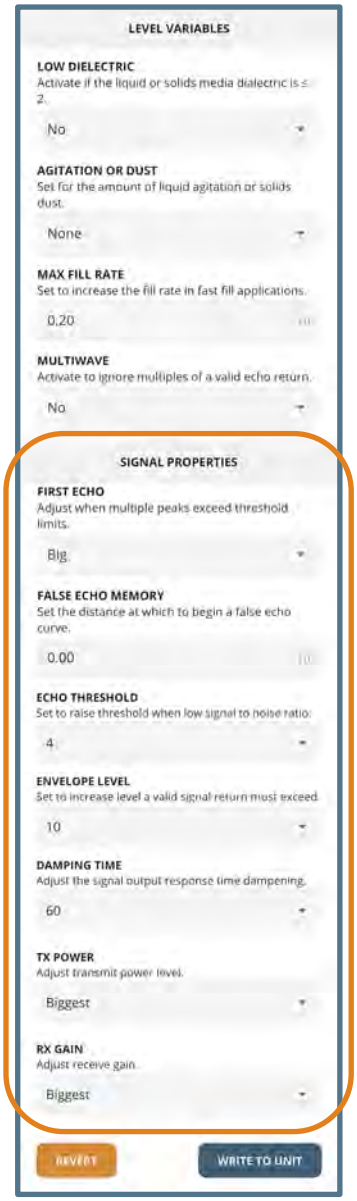

SIGNAL PROPERTIES

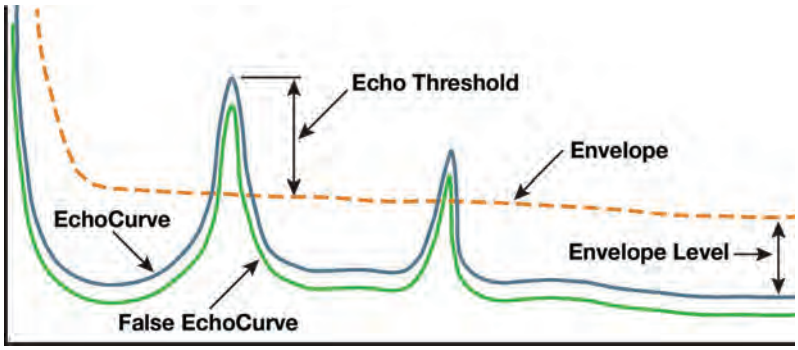

- **TX Power**
  - TX Power or Transmit Power refers to the strength of the outgoing signal transmitted by the sensor.
  - Options for TX Power are Biggest, Normal, Small and Weak with Biggest being the default.
- **RX Gain**
  - RX Gain or Receiving Gain refers to the strength of the incoming signal received by the sensor.
  - Options for RX Gain are Biggest, Normal, Small and Weak with Biggest being the default.
  - Since antennas are reciprocal, both settings (TX Power and RX Gain) will directly affect the operational range of the sensor.

Press **WRITE TO UNIT** to save any changes to the sensor.

Press **REVERT** to return all settings under **Advanced Settings** back to Factory Settings.

VOLUMETRIC LEVEL

When Volumetric Level is selected, the 4-20 mA output from the sensor will be proportional to the volume of the tank, not the height of the tank. This means that the current output will track the volume of the tank (in gallons or liters). Depending on the shape of the tank, the values may be on a linear or non-linear scale.
Note: This setting is best used in liquid applications. Solids applications will not match due to the surface never being level.

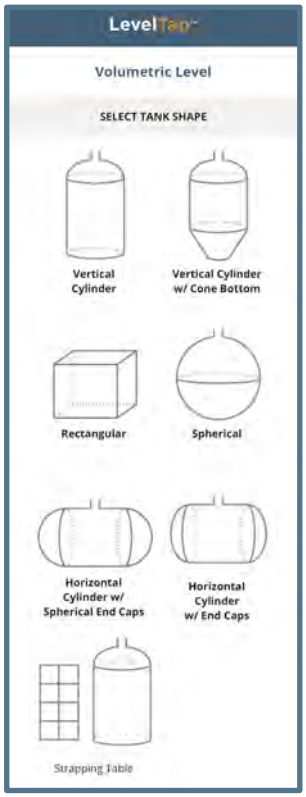

- **Tank Shape**
  - First, select the Tank Shape that best fits your application.
  - If your tank shape is not listed, you can select Strapping Table to manually enter known volumetric points in your tank.
- **Units of Volume**
  - Select the units that the output will be scaled to.
- **Tank Dimensions**
  - (S) Sensor Height
  - (F) Fill-Height
  - (R) Riser Height
  - (H) Tank Height
  - (D) Diameter
  - (L) Cylinder Length
  - (E) Cap Length

Note: Not all these settings will appear for each tank.

TANK PROPERTIES

Confirm the units of measurement and units of volume, and enter the dimensions for the tank.

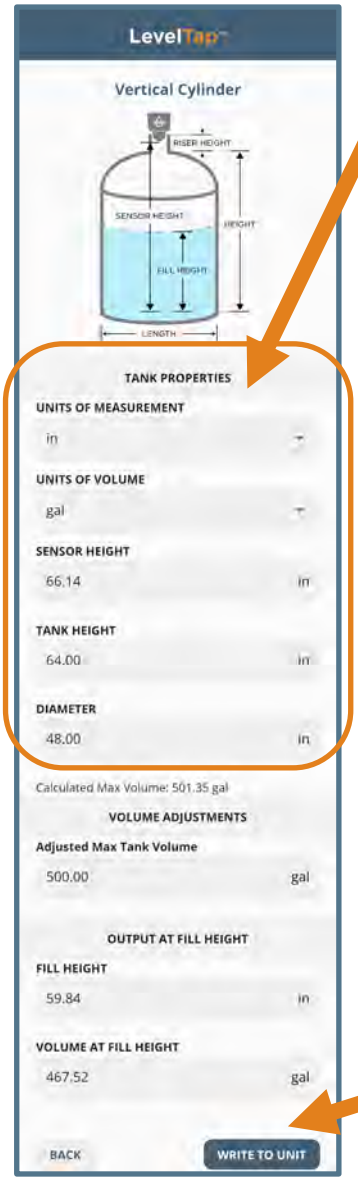

- **Units of Measurement**
  - Options include in, ft, mm, cm or m.
- **Units of Volume**
  - Select the units that the output will be scaled to.
  - Options include in^3, ft^3 gal, gal (imp) bbl, l and m3.
- **Tank Dimensions**
  - Sensor Height
  - Tank Height
  - Diameter
  - Fill-Height

Note: Not all these settings will appear for each tank.



Press **WRITE TO UNIT** to save any changes to the sensor.

To confirm the configuration is successful, a checklist will appear. Press the **X** in the upper left corner to close the screen.

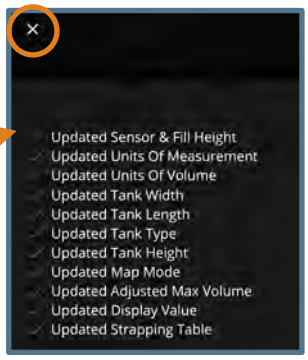

Green checks indicate successful data transfer while red X's show data that did not transfer. If you see a red X, re-check your settings and press **WRITE TO UNIT** again.

VOLUMETRIC ADJUSTMENTS & OUTPUT AT FILL-HEIGHT

Adjust the volume output to match the size of your tank and confirm the outputs for the configuraitons.

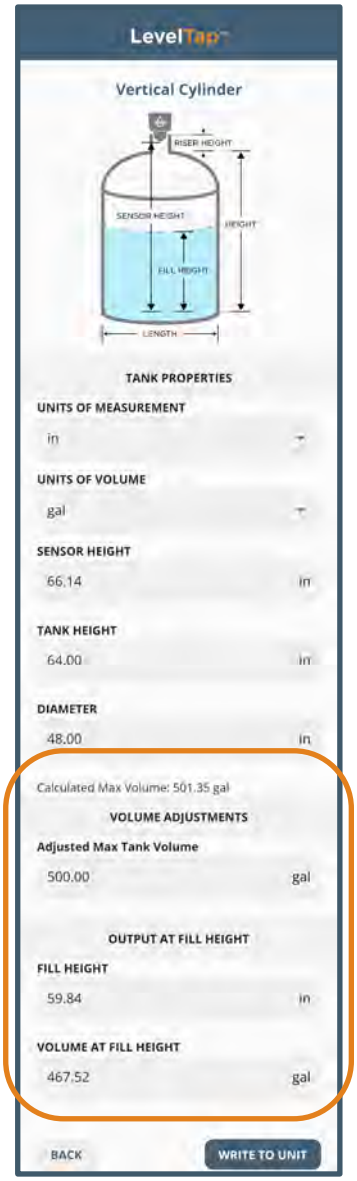

VOLUMETRIC ADJUSTMENTS

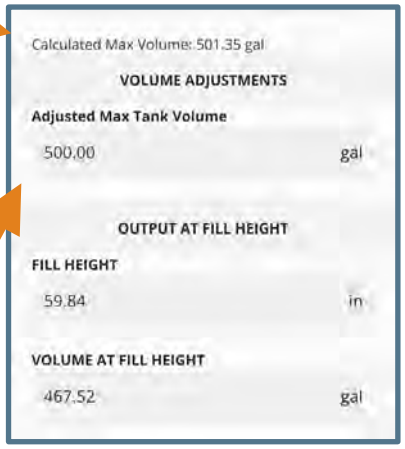

- **Calculated Max Volume: XXXXXX**
  - This number indicates the maximum volume calculated by the values used above in the Tank Properties.
  - Often this number will be slightly larger or smaller than expected.
  - Use Adjusted Max Tank Volume to modify the Calculated Max Volume.
- **Adjusted Max Tank Volume**
  - This setting to fine-tune the maximum volume used when scaling the output.
    - Enter the adjusted max tank volume in the field.
  - Never adjust more than 10% of the Calculated Max Volume.
    - If the Calculated Max Volume is off by more than 10%, please re-check the dimensions used under Tank Properties.

OUTPUT AT FILL-HEIGHT

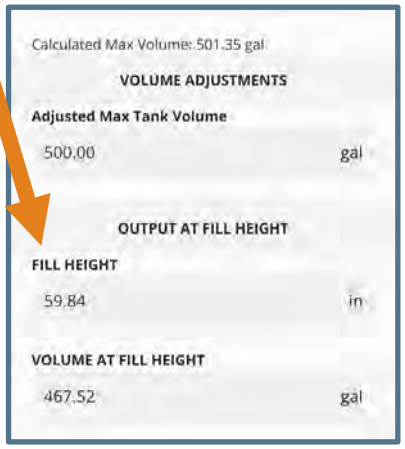

- **Fill-Height / Volume at Fill-Height**
  - Enter a value for Fill-Height (using the units of measurement) and the corresponding Volume at that Fill-Height will appear in the field below.
  - The Fill-Height value cannot be less than 0 and greater than the Tank Height.
  - Use this setting as a test to confirm the volume matches the actual tank parameters.
  - When **WRITE TO UNIT** is pressed, the value shown in Fill-Height will be written into memory of the sensor.
  - To avoid writing an incorrect value, press **BACK** to return to the previous screen.

Press **WRITE TO UNIT** to save any changes to the sensor.

STRAPPING TABLE

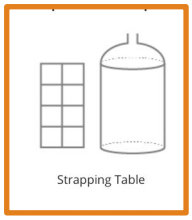

In the event the tank shape is not listed under Select Tank Shape, choose Strapping Table to manually enter a height vs. volume table for the tank.

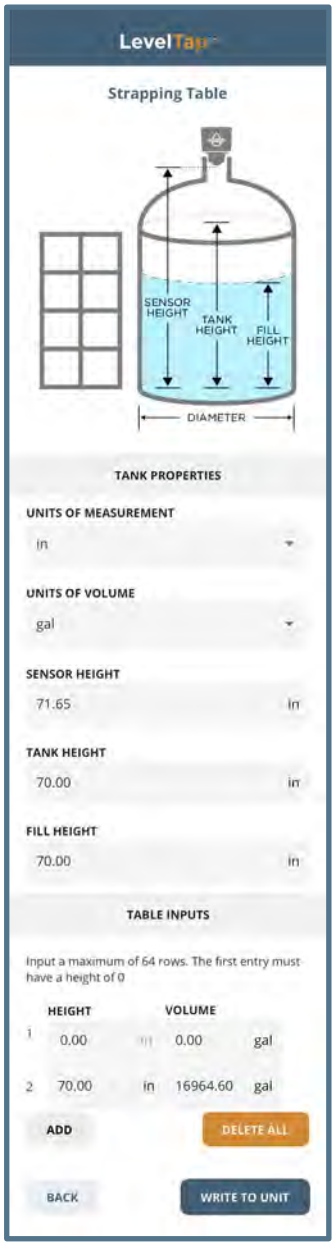

TANK PROPERTIES (STRAPPING TABLE)

- **Confirm Units of Measurement**
  - Options include in, ft, mm, cm or m.
- **Confirm Units of Volume**
  - Select the units that the output will be scaled to.
  - Options include in^3, ft^3 gal, gal (imp) bbl, l and m^3.
- **Sensor Height**
  - Sets distance from the bottom of the sensor to the bottom of the tank, which defines the 4mA set point.
- **Tank Height**
  - Sets distance from the bottom of the sensor to the maximum fill level, which defines the highest volume set point.
- **Fill-Height**
  - Sets distance from the bottom of the sensor to the maximum fill level, which defines the 20mA set point.

TABLE INPUTS (STRAPPING TABLE)

Input a maximum of 64 rows. The first entry must have a height of 0. The last entry must match the Fill-Height.

- Use the **ADD** button to add another row. Row will always insert above the last row.
- Use the **Delete icon** to remove a row.
- Use **DELETE ALL** to remove all rows except the first and last rows.

Note: Add or Delete rows prior to entering values under Height and Volume

Press **WRITE TO UNIT** to save any changes to the sensor.

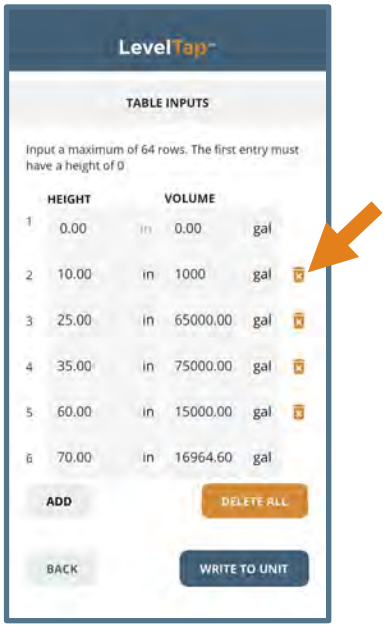

HOW TANK SHAPE EFFECTS VOLUME

In the examples below, the sensors are also configured with SH = 64” and FH = 60”. The current output in a linear tank will act as expected with volume increase matching equal changes to level. However, the current output in a Non-Linear tank will reflect the actual changes in volume. So even though the liquid height changes incrementally the same amount, the volume change will adjust throughout the entire span of the tank. The advantage of this is that the sensor does all the math, so you can read tank volume using a simple two-point display/controller such as the DataLoop™ LI25 series or DataView™ LI55 series.

Linear Tank Example

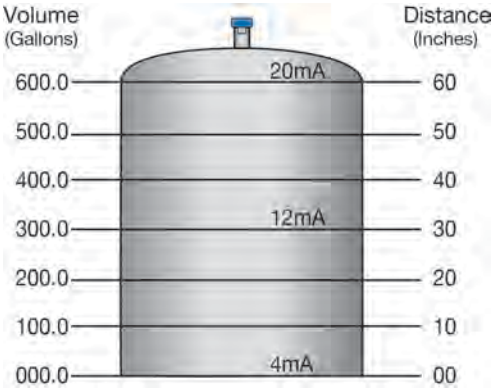

Note: In the above illustration, 10” of liquid will always be equal to 100 gallons of liquid (1” = 10 gallons).

Non-Linear Tank Example

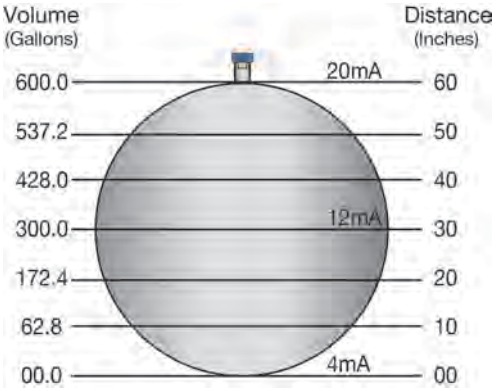

Note: In the above illustration, 1” of liquid does not equal 10 gallons. The 10” at the bottom represents a rise of 62.8 gallons. As a change between 10” and 20” represents an increase of 109.6 gallons (i.e., 172.4 gallons – 62.8 gallons).

Linear Tank Example



Non-Linear Tank Example



The **Linear Tank example** shows the 1” of liquid will always be 10 gallons. The total number of rows does not matter. You can use two (2) or sixty-four (64) rows to accomplish the same result.

The **Non-Linear Tank example** shows that a tank volume can be simulated and improved by adding more rows.

FLUME FLOW

Change the output of the transmitter from a linear signal proportional to the height of liquid in the tank to a non-linear signal that corresponds to the flow rate in a Flume.

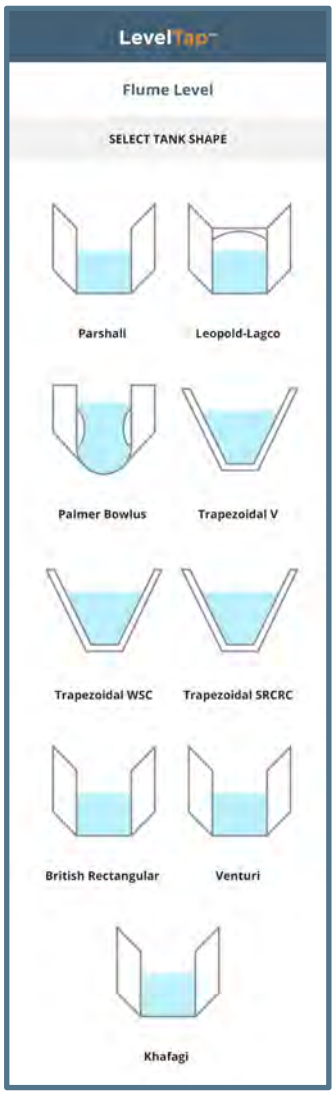

- **Select Flume Shape**
  - Select the Flume Shape that best fits your application.
  - Options include Parshall, Leopold-Lagco, Palmer-Bowlus, Trapezoidal V, Trapezoidal WSC, Trapezoidal SRCRC, British Rectangular, Venturi and Khafagi.
- **Flume Properties**
  - Select the properties that match your flume, which typically include the Units of Flow, Sensor Height and Throat Width.
- **Flow Variable**
  - Confirm the variables associated with the flume selected, which typically include Max. H, k and n values.
    - **Note:** Not all these settings will appear for each flume.

FLUME PROPERTIES

Use this section to confirm the units of flow, sensor height and flume size.

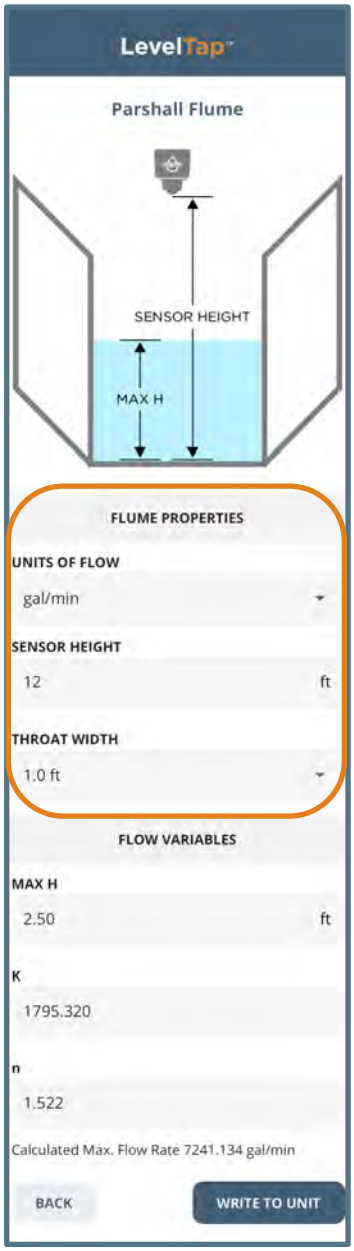

- **Units of Flow**
  - Options include:

    M^3/s, ft^3/hour,
    M^3/min, ft^3/day,
    M^3/hour, Gal/min,
    M^3/day, Gal/hour,
    Liter/min, Gal/day,
    Liter/hour, MGal.day,
    Liter/day, Gal_Imp/min,
    MLiter/Day, Gal_Imp/hour
    ft^3/Min, Gal_Imp/day.



- **Sensor Height**
  - This is the distance from the bottom of the flume to the bottom of the sensor.
  - Enter this distance in units of feet or meters.
- **Throat Width**
  - Select the width of the throat from the pull-down menu.

Note: Not all these settings will appear for each tank.

FLUME FLOW VARIABLES

Use this section to confirm the flow variables associated with the selected flume.

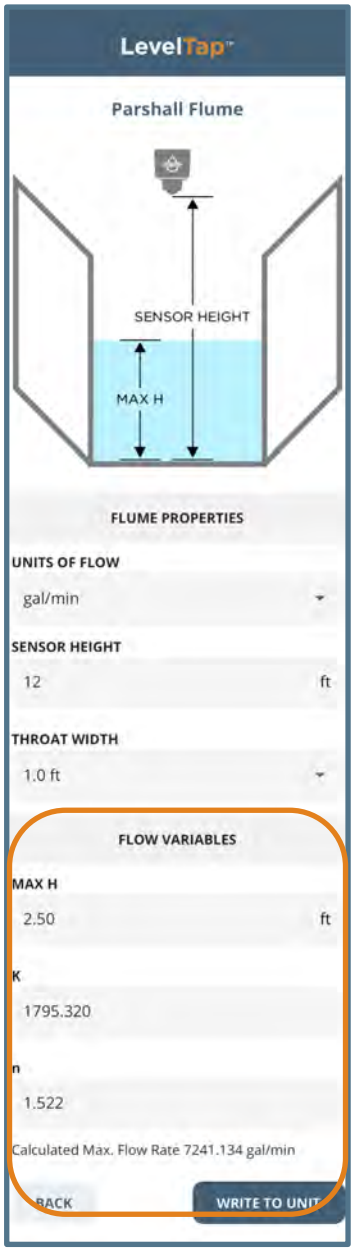

- **Maximum Height (Max H)**
  - The is the maximum height of the flume.
    - The height is predetermined from the selection of the throat width of the flume.
- **k value**
  - This is the correction value that is determined by the throat width of the flume in association with the flow rate units selected.
  - Typically, this value should never be changed.
- **n value**
  - This is the exponent used in the flow rate calculation formula.
  - Typically, this value should never be changed.
- **Calculated Max. Flow Rate:**
  - This is the maximum flow rate that can be measured when the liquid height is at the maximum within the flume.

Note: Not all these settings will appear for each flume.

Write to Unit is used to save any changes to the sensor. Any changes made are not saved into EchoBeam® until **Write to Unit** is pressed.

To confirm the configuration is successful, a checklist will appear. Click on the **X** in the upper left corner to close the screen.



Green checks indicate successful data transfer while red x's show data that did not transfer. If you see a red X, re-check your settings and click on **Write to Unit** again.

WEIR FLOW

Configure the sensor to convert weir level height into flow rate and output in flow rate units.

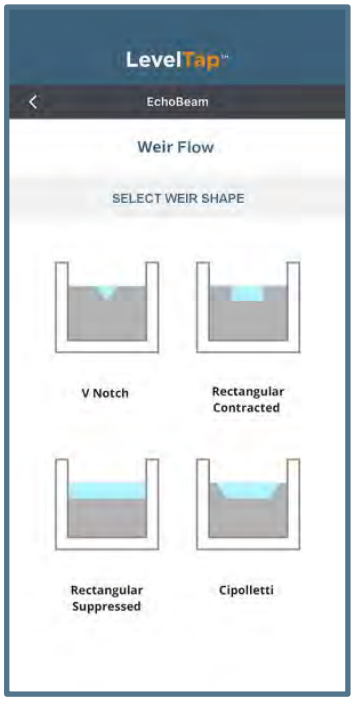

- **Select Weir Shape**
  - Select the Weir Shape that best fits your application.
  - Options include V-Notch, Rectangular Contracted, Rectangular Suppressed and Cipolletti.
- **Weir Properties**
  - Select the properties that match your weir which typically include the Units of Flow, Sensor Height, and Weir length/angle.
- **Flow Variable**
  - Confirm the variables associated with the weir selected which typically include Max. H, k and n values.

- **Note:** Not all these settings will appear for each weir.

WEIR PROPERTIES

Confirm the units of flow, sensor height and weir length/angle.

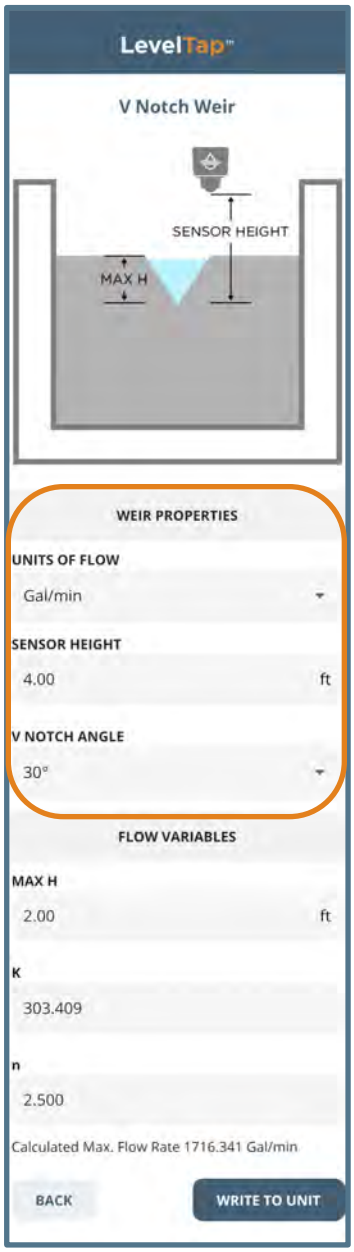

- **Units of Flow**
  - Options include:

    M^3/s, ft^3/hour,
    M^3/min, ft^3/day,
    M^3/hour, Gal/min,
    M^3/day, Gal/hour,
    Liter/min, Gal/day,
    Liter/hour, MGal.day,
    Liter/day, Gal_Imp/min,
    MLiter/Day, Gal_Imp/hour
    ft^3/Min, Gal_Imp/day.



- **Sensor Height**
  - This is the distance from the bottom of the weir to the bottom of the sensor.
  - Enter this distance in units of feet or meters.

- **Weir Length/Angle**
  - Rectangular (Contracted or Compressed) and Trapezoidal will require the length of the weir.
  - V-Notch will require the angle of the weir.

Note: Not all these settings will appear for each weir.

Rectangular (Contracted or Compressed) and Trapezoidal Pull Down:

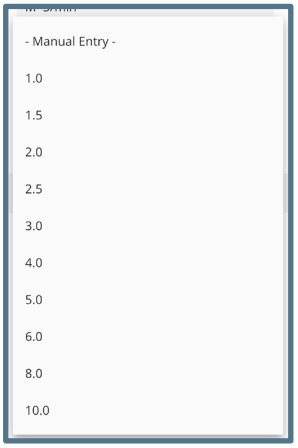

V-Notch Pull Down:

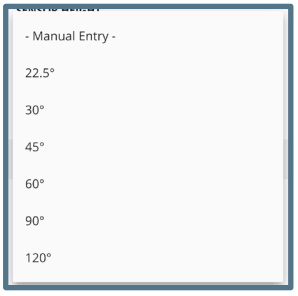

WEIR FLOW VARIABLES

Confirm the flow variables associated with the selected weir.



- **Maximum Height (Max H)**
  - This is the maximum height of the weir.
  - The height is predetermined from the selection of the length or angle of the weir.
- **v value**
  - This is the head correction value that is determined by the length/angle of the weir in association with the flow rate units selected.
  - Typically, this value should never be changed.
- **n value**
  - This is the exponent used in the flow rate calculation formula.
  - Typically, this value should never be changed.
- **Calculated Max Flow Rate:**
  - This is the maximum flow rate that can be measured when the liquid height is at the maximum over the crest of the weir.

Note: Not all these settings will appear for each tank.

Press **WRITE TO UNIT** to save any changes to the sensor.

To confirm the configuration is successful, a checklist will appear. Press the **X** in the upper left corner to close the screen.



Green checks indicate successful data transfer while red x's show data that did not transfer. If you see a red X, re-check your settings and press **WRITE TO UNIT** again.

CONFIGURATION FILE



Save, Load, Import or Export a configuration.

SAVE

- **Name Configuration**
  - Input a name to identify the configuration.
  - This feature will save the configuration on the EchoBeam® and will allow the configuration to be loaded onto other transmitters.
  - Configuration name is limited to 36 characters.
  - Tap **Save** to save file.

LOAD

- **Saved Configurations**
  - Load saved configuration files.
    - All Saved files for this sensor will appear in the pull-down menu.
  - Once a file has been selected, tap **Write to Unit** to load configuration into the sensor.
    - The file must be compatible with the connected transmitter's model (e.g., file must be for an LR81 if the transmitter that is connected is an LR81).

IMPORT

- **Shared Configurations**
  - Load shared configuration files that are compatible with the connected sensor model.
    - All Imported files for this sensor will appear in the pull-down menu.
    - These are files that were sent via email to this account.
  - First, select the configuration file you want to import.
  - Next, press **Write to Unit** to import and load the configuration file into the sensor.

EXPORT

- **Share Configurations**
  - Export and send a snapshot of the selected configuration file via email.
  - Enter the Email address of the person you want to send the configuration file to.
- **Saved Configurations**
  - Use pull-down menu to select the file you want to share.
  - Press **EXPORT** to send the Email.

Note: You must allow LevelTap™ access on your Smartphone or Tablet to send an Email. The recipient of the Email must have an active LevelTap account that uses the Email address being sent this file.

CONFIGURATION PHOTOS

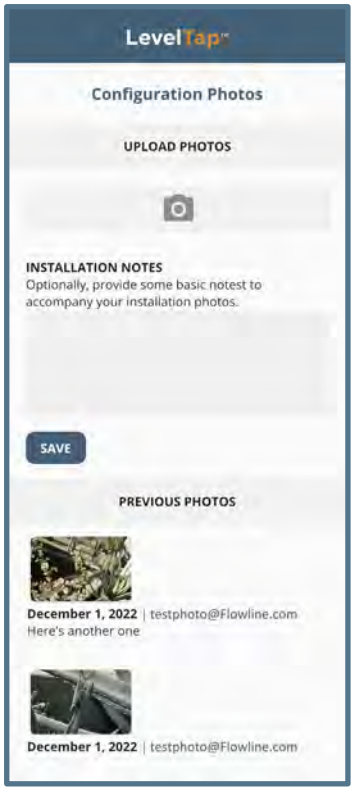

Use this feature to take a photo of the EchoBeam® installed in the application.

UPLOAD PHOTOS

- **Press the Camera Icon to take a Photo.**
  - You can either take a photo directly with your Smartphone camera or select from your photo library.
  - You will need to grant LevelTap™ access to either your camera or your photo library.
  - Add some Installation Notes to further define the photo.
  - Press **SAVE** to save photo.

PREVIOUS PHOTOS

Scroll through previous photos to review past installations.

ECHOCURVE DIAGNOSTICS

This function graphically displays the primary echo return(s) the sensor sees, the location and amplitude of the return(s), and the numeric air gap distance from the bottom of the transmitter to the level below. The distance vs. signal strength plot below shows the sensor's current signal return in blue and threshold curve in orange. A valid level is indicated by the peak value where the return exceeds the threshold.

Note: This step should only be performed after having completed the prior six configuration steps and with the transmitter installed on the tank.



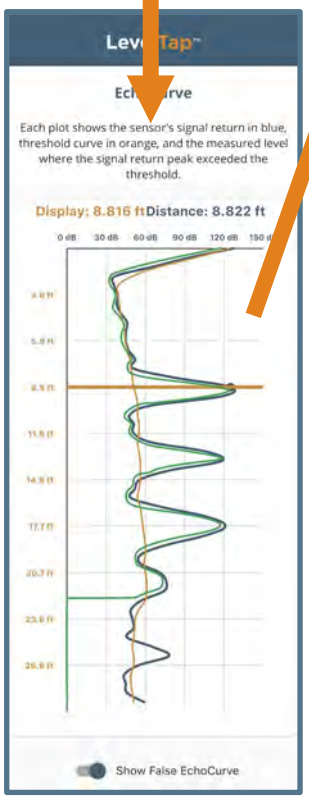

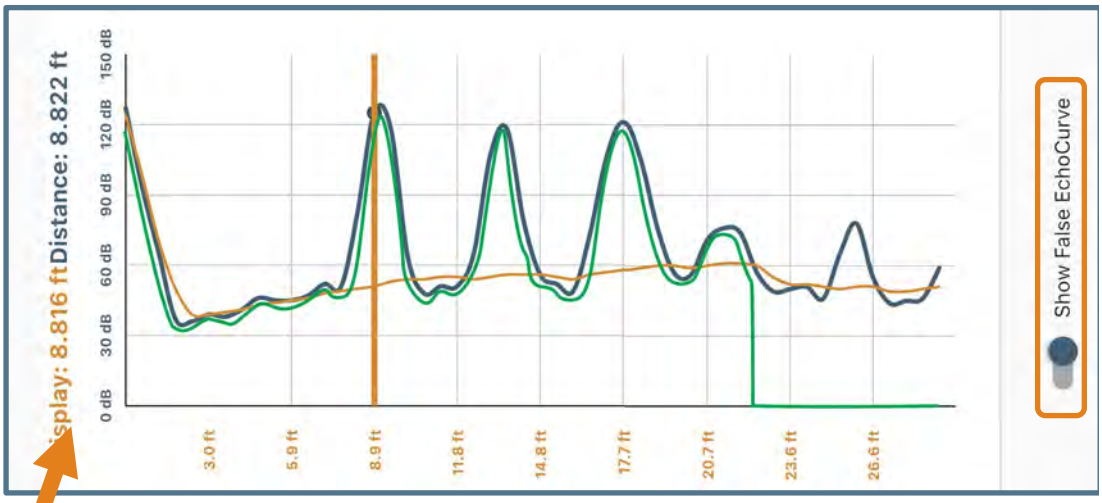

- **Vertical Axis (Y-axis)** – Provides the strength of the signal being measured by the radar transmitter. The value is in units of decibels (dB).
- **Horizontal Axis (X-axis)** – Provides the distance away from the bottom of the radar transmitter. The value is in units of length (i.e., Feet, Meters, etc.)

  As you move from left to right, you are moving further away from the bottom of the transmitter (level getting lower).
- **Blue Line** – Represents the actual EchoCurve with the largest peak being the liquid or solid level.

  Always check to see if the peak matches the location of the level.
- **Orange Line** – Represents the threshold used to filter out false signals.

  This is the baseline that is used to identify a potential level reading.

  Any signal below this line will be ignored while any signal above the line is a potential level reading.
- **Green Line** – Represents the False EchoCurve.

  Creating a False EchoCurve will help to filter out potential false signals and will improve the performance of EchoBeam®.

Note: If there are multiple returns above the Orange Line, then it is suggested to create a new False EchoCurve.

WHAT IS A GOOD ECHOCURVE?

EchoCurve presents a physical representation of the return signal across the operational range for the radar transmitter. There are two components to observe when looking at the EchoCurve:

- **Check the Peak(s) along the EchoCurve**
  - Ideally, there should be a significant peak which represents the liquid or solids level in the tank.
  - This peak should be above the Orange Line (Threshold Filter).
  - There may be more, and smaller peaks located before and after the large peak.

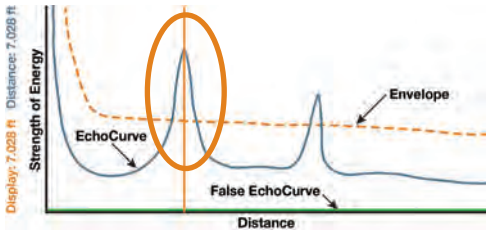

Echo Peaks along the EchoCurve

- **Check the Location of Peak (Return)**
  - To the left of the EchoCurve, there are two values.
  - Display Value represents the air gap distance from the radar transmitter to the level.
  - Distance Value represents the air gap distance from the radar transmitter to the peak amplitude location.

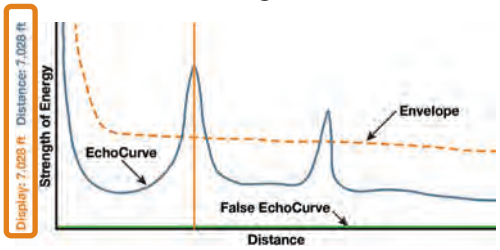

Location of Echo Return

  - These two values should be close to one another (or the same value).
    - The example above indicates that the liquid level is located 7.028 feet away (Display Value) and the peak amplitude is also located 7.028 feet away (Distance Value) from the radar transmitter.
    - The liquid or solids level should be at this peak location.

WHAT IS A BAD ECHOCURVE?

There are several elements which indicate a bad EchoCurve.

- **Peak before the liquid or solids level**
  - If the most significant peak is ahead of/above the actual level of liquid or solids, this typically indicates interference from a physical object that is reflecting the radar energy back to the transmitter.
  - Performing a False EchoCurve will allow the EchoBeam® to filter out this false signal.

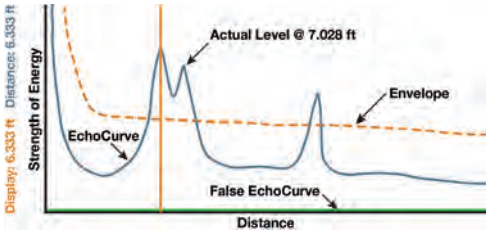

- **Peak after the liquid or solids level**
  - If the most significant peak is behind/below the actual level of liquids or solids, this typically indicates interference from a physical object that is reflecting the radar energy back to the transmitter.
  - Performing a False EchoCurve will allow the EchoBeam® to filter out this false signal.

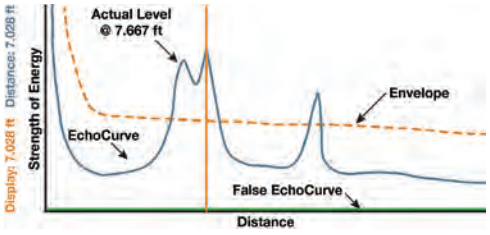

WHAT IS A BAD ECHOCURVE? (CONT.)

- **Multiple peaks before or after the liquid or solids level**
  - If there are multiple peaks, the EchoBeam® may have trouble identifying which is the correct peak (liquid or solids level).
  - Performing a False EchoCurve will allow the EchoBeam® to filter out the false signals.
  - Also consider activating the Multiwave filter which can be found under Configuration > Advanced > Settings > Level Variables.
    - Change variable from NO to YES.

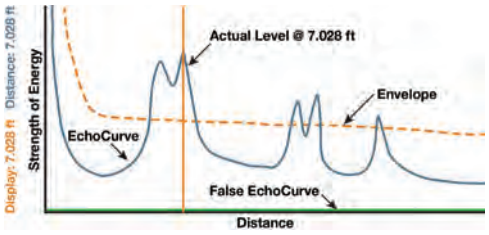

- **Peak underneath the orange line**
  - If the most significant peak is beneath the orange line (Threshold Filter), then the return signal is weak.
  - Consider changing the first Echo filter, which can be found under Configuration > Advanced > Settings > Signal Properties.
    - Change variable from the default of Normal to Big, Bigger or Biggest.
    - Big will increase the peak by -10dB, Bigger by -20dB and Biggest by -40dB.
  - Performing a False EchoCurve will also allow the EchoBeam® to filter out this false signal, making it easier to identify the actual liquid or solids level.

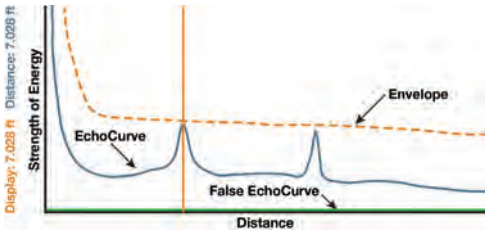

- **Peak way above the orange line**
  - If the most significant peak is way above the orange line (Threshold Filter), then the return signal is strong and could affect the accuracy when the level is close to full.
  - Consider changing the first Echo filter, which can be found under Configuration > Advanced > Settings > Signal Properties.
    - Change variable from the default of Normal to Small which will decrease the peak by -10dB.

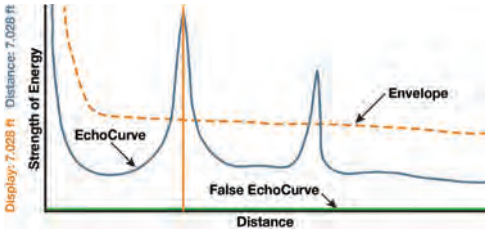

FALSE ECHOCURVE

Performing a False EchoCurve will help the sensor filter out any false signals caused by obstructions (mixer blades, side wall weld joints, fill pipes, etc.) or abnormalities within the measurement range. This function maps all echo returns within the tank, differentiating between actual and false echoes. Echoes identified as false will be stored into the False EchoCurve and will not be considered in the level measurement of liquids or solids.

- **False Echo Value -** This setting **does** require a manual entry of the False Echo Value (see image).
  - Measure the current distance of the level from the bottom of the sensor.
  - Multiply the **Current Distance** by 0.95 and enter that value as the False Echo Value and press **CREATE** to begin the auto mapping.

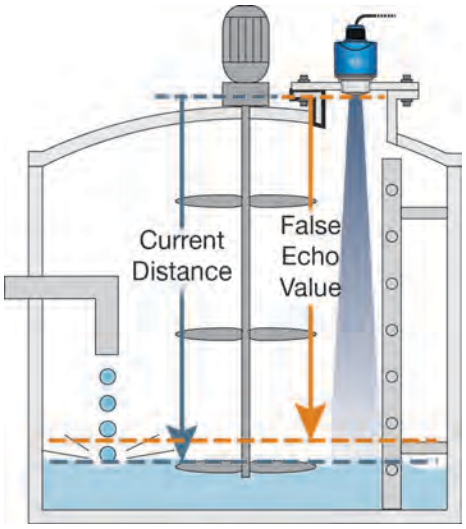

Note: A False EchoCurve should be performed when the tank is empty or as close to empty as possible so all false reflections will be detected.

- A simple trick is to switch the Display setting to Distance, then observe the Distance value on the Transmitter's information page.
  - The Distance value shows the exact distance from the media surface to the bottom of the transmitter.
  - Be sure to return Display Setting to Level Height if that was your pervious setting.

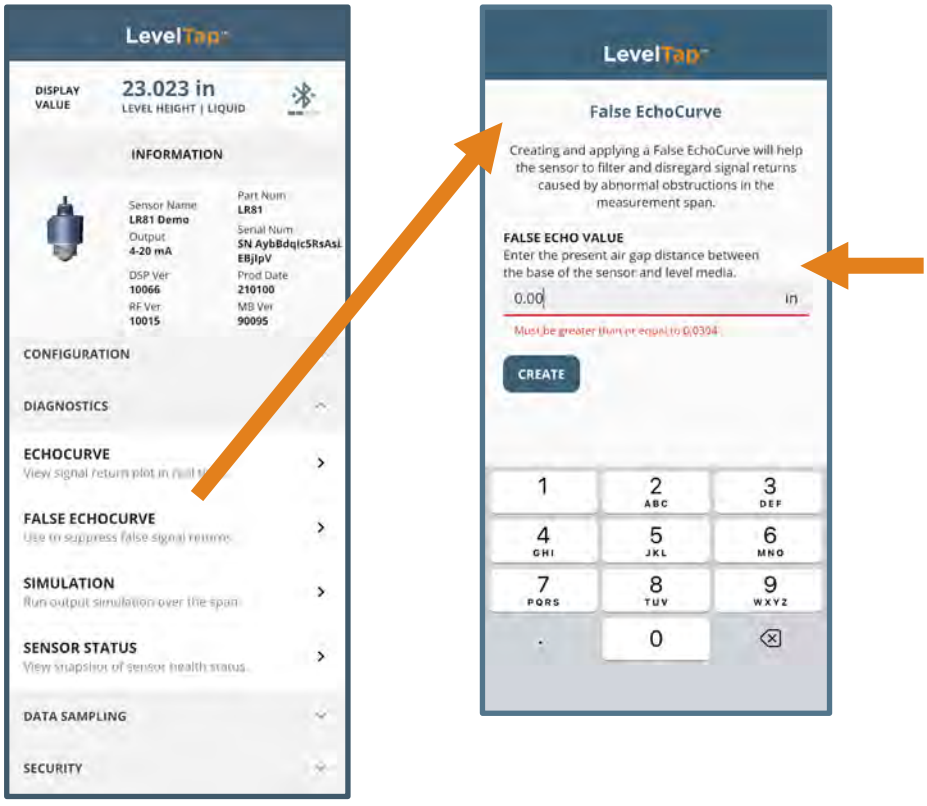

Note: To remove or undo the False EchoCurve, enter the value 0.001 and press **CREATE**. This will erase the False EchoCurve.

SIMULATION



- **Simulation**

Simulate various level conditions by manually adjusting the output of EchoBeam®. This can be used to confirm functionality of a system without having to wait for the level in the tank to rise or fall to a specific level (e.g., If you need a high alarm to activate at 9.5 feet, you can use Simulate to output the equivalent current for 95% without having to raise the liquid or solids level to the actual 9.5 feet).

- First, select the **Measured Value** (units you want to use to adjust). There are two methods to choose from:
  - Current Output – This method explicitly sets the current output (4-20mA) to the desired value.
  - Distance Output – This method uses distance from the sensor's measurement location to set the current output (4-20mA) between the Empty and Full Configuration values.
- Next, switch the Activate Simulation to ON.
- Use the slider to adjust the value to your desired setting.

Note: The Simulation will end when the Activation switch is turned OFF or when you leave this screen. The Simulation will remain ON if you walk away from it or if you lose Bluetooth connection with the sensor.

SENSOR STATUS



- **Sensor Status**

View all values measured by the transmitter including:

- Temperature – Internal temperature of the transmitter.
- Signal Strength – General health status of the return signal.
  - Value is in dB with a range from 0 to 150.
- Status – Confirmation of the transmitter's status.
- Start Time – How long the EchoBeam® has been running.
- Units of Measurement – How the sensor's units are configured.
- Percentage – This value is scaled over the span of the 4-20mA current output and represents the amount of media is measured in percentage.
- Height – Lists the Height of Media (Liquid or Solids) across the 5 units of measurement.
- Distance - Lists the Distance to the Media (Liquid or Solids) from the sensor across the 5 units of measurement.

Note: Each row represents the Height and Distance value for the unit of measurement. If you add the two values together, they will add up to the Sensor Height value.

SETUP AND ENABLE

Select data intervals and activate.

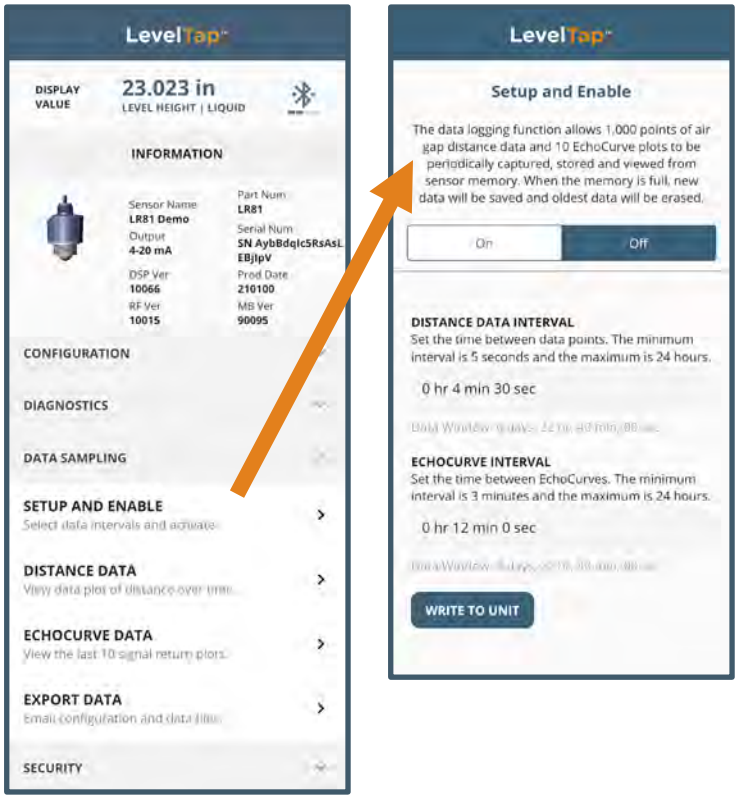

Measured from the edge of the antenna, this function allows 1,000 points of air gap distance data and 10 EchoCurve data plots to be captured and stored in sensor memory. When the memory is full, new data will be saved and the oldest data will be erased.



Distance Data Interval

Set the time between data points. The minimum interval is 5 seconds, and the maximum is 24 hours.

- Scroll to set hours, minutes and seconds. Press **Confirm** to save interval.
- The Data Window value (seen underneath the Distance Data Interval field) will show the length of time the data covers.

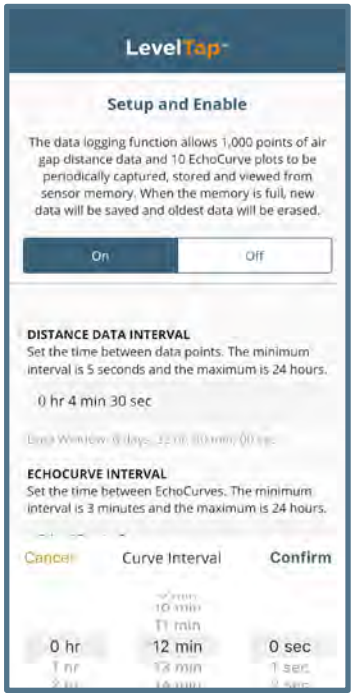

EchoCurve Interval

Set the time between EchoCurves. The minimum interval is 3 minutes, and the maximum is 24 hours.

- Scroll to set hours, minutes and seconds. Press **Confirm** to save interval.
- The Data Window value (seen underneath the EchoCurve Interval Field) will show the length of time the data covers.



Activate Data Sampling

- Select ON to enable the Data Sampling for both Distance and EchoCurves.

Press **WRITE TO UNIT** to save the above settings into the sensor.

DISTANCE DATA

View data plot of distance over time.

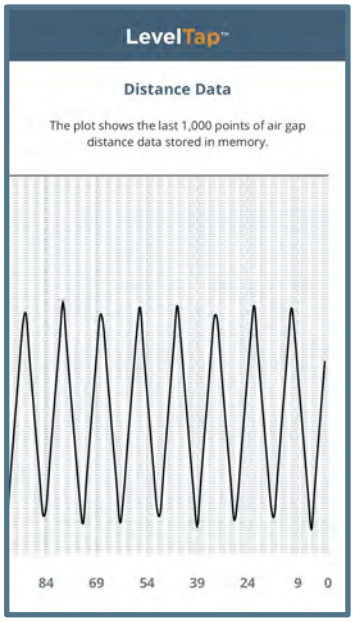

- **Distance Data**
  - The Distance plot shows the last 1,000 points stored within the sensor's log. If power has been lost at any time during this window, it will be indicated with a zero value.

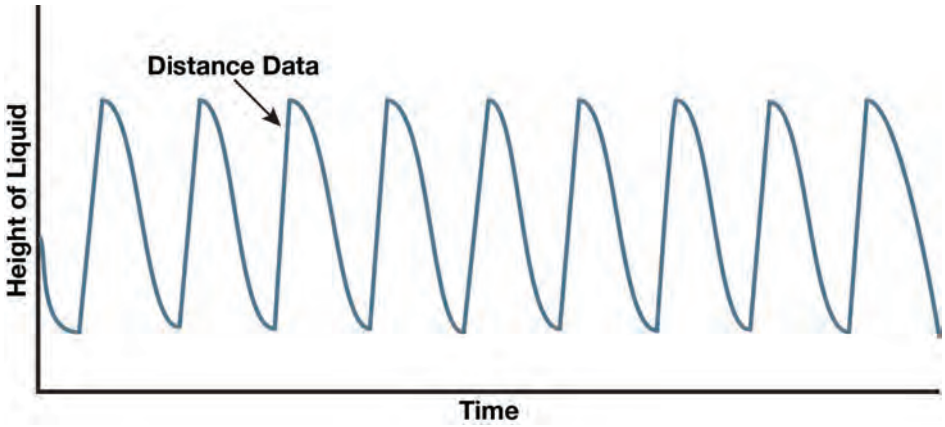

ECHOCURVE DATA

View the last 10 signal return plots.

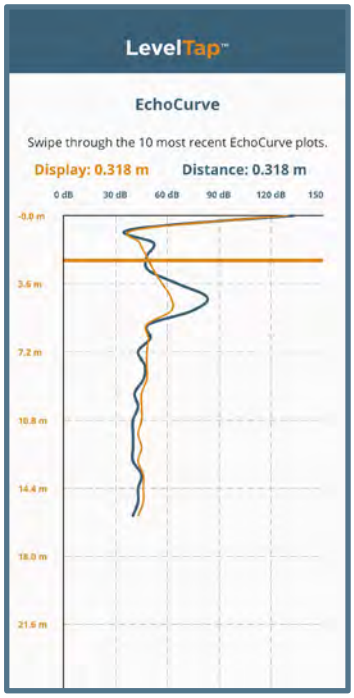

- **EchoCurve Data**
  - Swipe through the 10 most recent EchoCurve plots.

EXPORT DATA

Email configuration and data files.

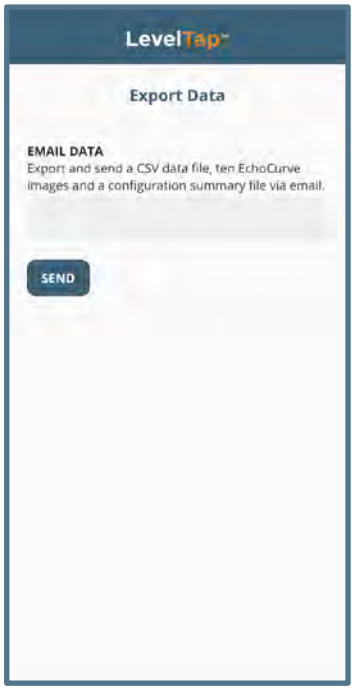

- **Email Export Data**
  - Export and send a CSV file of data, 10 plot images, and a configuration summary text file via email.
  - Enter Email address of recipient of data.
  - Press **SEND** to send the Email.

WRITE PROTECT

Requires a Write Protection Code to alter critical settings. This code is unique and determined by the person enabling Write Protect.

- **Write Protect**
  - When Write Protect is enabled, no changes can be made to the sensor's configuration without a six-digit security protection code first being entered.
  - When engaged, no critical settings can be changed until the Write Protect code is entered.
  - Whenever the Write Protect code is re-entered, this will turn off Write Protect. At this point, the sensor is operating as normal and any changes can be made and Write Protect will remain Off. To re-engage Write Protect, it must be turned ON again.

Note: This function should only be performed by a trained technician. The Write Protection Code should be stored in a safe location.

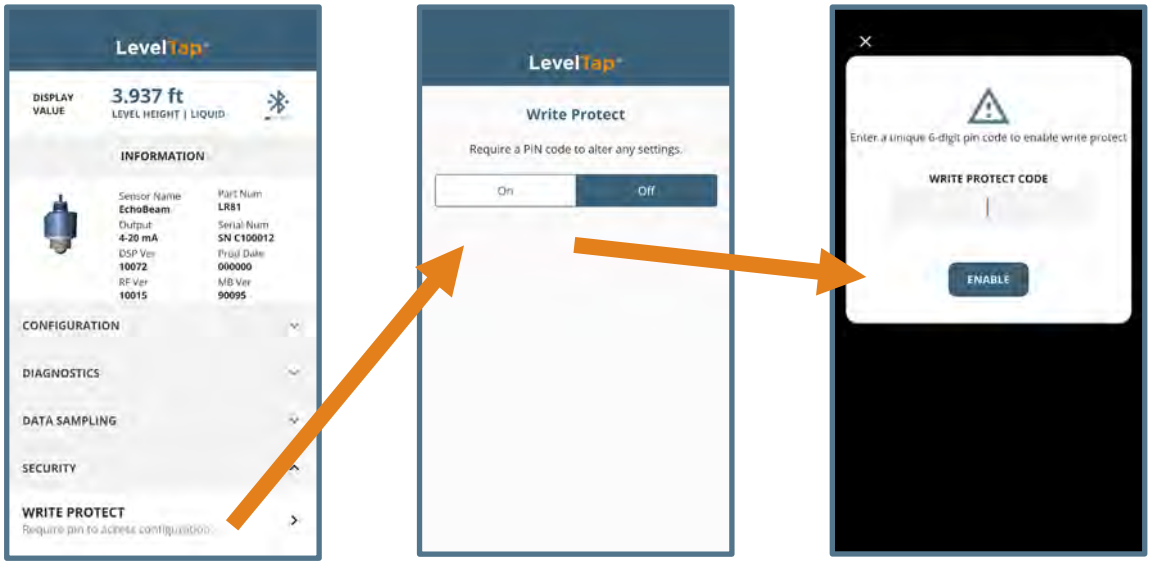

To disable Write Protect. Press **Off** and enter the Write Protect Code and press **Disable**.

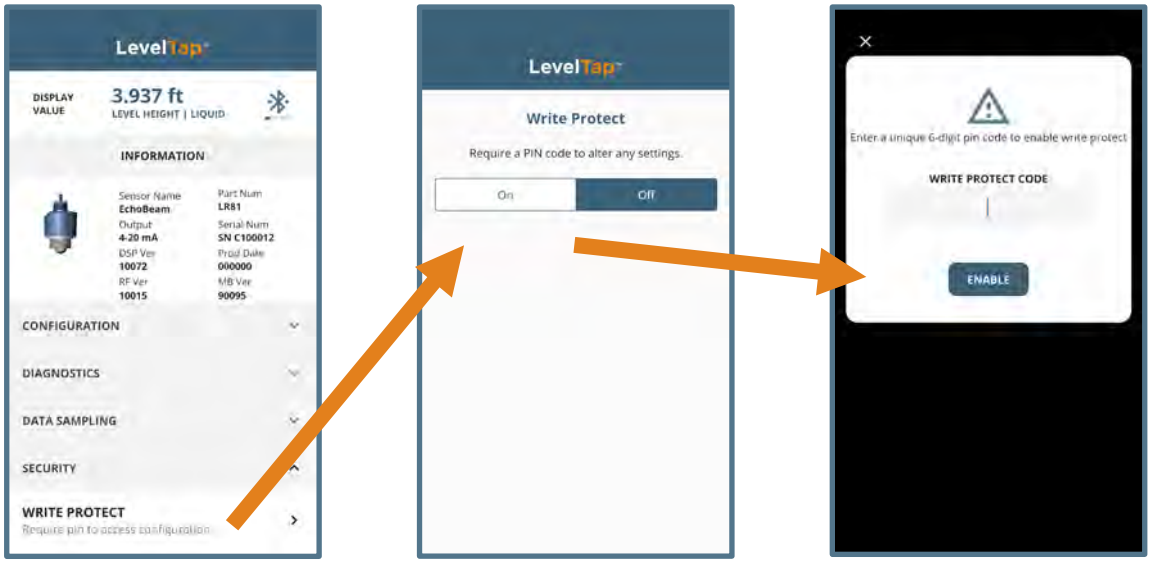

FACTORY RESET

Reset sensor back to factory settings.



- **Default Configurations**
  - Press the **FACTORY RESET** button to return the EchoBeam® back to its original factory settings.

Series	LR80	LR81	LR83	LR85
Sensor Name	LR80	LR81	LR83	LR85
Application	Liquids	Liquids	Liquids	Solids
Units of Measurement	Ft	Ft	Ft	Ft
Fail-Safe Output	20.5mA	20.5mA	20.5mA	20.5mA
Sensor Height	32.81 ft (10m)	98.42 ft (30m)	98.42 ft (30m)	393.70 ft (120m)
Fill-Height	32.31 ft (9.85m)	97.92 ft (29.85m)	97.92 ft (29.85m)	393.20 ft (119.85m)
Display Value	Liquid Height	Liquid Height	Liquid Height	Liquid Height
Dead Band	0.45 ft (0.14m)	0.45 ft (0.14m)	0.45 ft (0.14m)	0.45 ft (0.14m)
Maximum Range	34.45 ft (10.5m)	103.35 ft (31.50m)	103.35 ft (31.50m)	413.39 ft (126m)

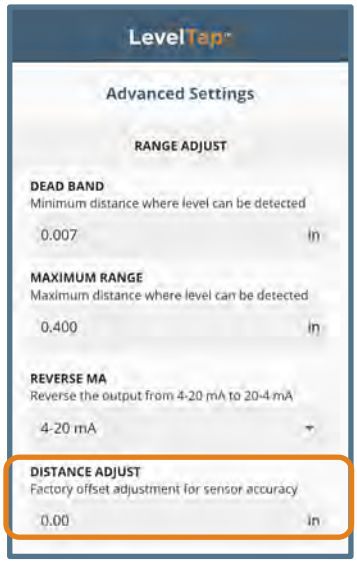

Note: Record the Distance Adjust setting if a Factory Reset is performed. Distance Adjust can be found under Configuration > Advanced Settings > Range Adjust > Distance Adjust.

TROUBLESHOOTING OVERVIEW

Problem	Solution
Cannot pair to transmitter	Move closer to the transmitter. Line of sight with the transmitter works best. Make sure no other user devices are currently paired to the transmitter. Only one device can be paired to the transmitter at a time.
Cannot see new transmitter under Unpaired Sensors	Swipe down on the App to refresh screen. Move closer to the transmitter. Line of sight with the transmitter works best. Make sure sensor is powered and voltage is not below the low threshold of the specification. Lastly, Turn on Location Sharing in the Navigation Menu (under Account>General) .
Walked away from a paired sensor and now I cannot see the original sensor	First, swipe down on the App to refresh screen. If the sensor still does not appear, close App, start App again and sensor should reappear (if in range).
Transmitter output is between 0mA to 3.9mA	Check wiring for open circuit.
Paired sensor is asking for PIN code again.	First, close LevelTap window on Smartphone and then open again. If this does not work, close LevelTap App and the restart App.
Transmitter jumps to a current reading between 19 and 20 mA	Check the installation of the transmitter. Bad installation fittings will cause false signals near the top of the tank, which typically translates to a signal between 19 and 20 mA. Also look for interference just below the transmitter.
Transmitter output > 22mA	Immediately check wiring for short circuit. EchoBeam® is current limited to 22 mA. Anything above 22 mA indicates a short circuit.
Transmitter always jumps to the Fail-Safe condition	Check the dimensional configuration (Sensor Height and Fill-Height) of EchoBeam®. Make sure that the Fill-Height setting corresponds to the full level of liquid or solids (measured from the bottom up) and not the distance from the transmitter to the surface of the liquid or solids (not the air gap).
Transmitter output reaches 4mA before the tank is empty	Check the Sensor Height setting. If this setting is too short, the transmitter will reach 4mA before the tank is empty.
Transmitter output will not reach 4mA	Check the Maximum Range setting. If this is set too short, the transmitter will never reach 4mA and will always be short.
Transmitter output reaches 20mA before the tank is full	Check the Fill-Height setting. If this setting is too short, the transmitter will reach 20mA before the tank is full.
Transmitter output will not reach 20mA	Check the Dead Band setting. If this is set too large, the transmitter will never reach 20mA and will always be short.
Transmitter output jumps up and down erratically	Check the cable for electrical interference, typically from VFDs or motors located close to the transmitter and/or cable. Make sure the cable is shielded or in metal conduit. Also check the grounds for all the local equipment.
False EchoCurve needs to be undone, removed or erased	Go to Diagnostics > False EchoCurve and enter the value 0.001 and Press **CREATE**. This will erase the False EchoCurve.
Continue to receive notification of configuration changes	In the Navigation Menu, go to Account, then General. Under Notifications, either turn Notifications OFF or go down the list of paired sensors and un-check the sensor sending the configuration changes.

ERROR CODES – 4-20MA/HART WITH DISPLAY

Error Code	Display Code	Error Definition
E1	CommErr	Display communication error. Typically appears when display module is not attached correctly. May also indicate communication error between the display and the main electronics.
E2	EEPromError	ROM write error. EEPROM is no longer operational. Transmitter requires factory service.
E3	PLL ERR	Antenna circuit error. The circuitry that controls the antenna is no longer operational. Transmitter requires factory service.
E7	sysbusy	Processor is slow or is not processing requests. This can occur with low voltage. Check power supply for an unexpected drawing down of power. Also check transmitter to determine whether a large amount of data is currently being requested.
E8	LOWPOWER	Low voltage. Check the power supply for an unexpected drawing down of power.
E14	NOSIGNALERR	Has no valid echo signal. Check the EchoCurve for an unusual signal return.

ERROR CODES - MODBUS

Error Code	Display Code	Error Definition
0x0004		Measurement status (read-only);
E1	CommErr	Display communication error. Typically appears when display module is not attached correctly. May also indicate communication error between the display and the main electronics.
E2	EEPromError	ROM write error. EEPROM is no longer operational. Transmitter requires factory service.
E3	PLL ERR	Antenna circuit error. The circuitry that controls the antenna is no longer operational. Transmitter requires factory service.
E7	sysbusy	Processor is slow or is not processing requests. This can occur with low voltage. Check power supply for an unexpected drawing down of power. Also check transmitter to determine whether a large amount of data is currently being requested.
E8	LOWPOWER	Low voltage. Check the power supply for an unexpected drawing down of power.
E14	NOSIGNALERR	Has no valid echo signal. Check the EchoCurve for an unusual signal return.

ERROR CODES – SDI-12

Error Code	Display Code	Error Definition
1	CommErr	Display communication error. Typically appears when display module is not attached correctly. May also indicate communication error between the display and the main electronics.
2	EEPromError	ROM write error. EEPROM is no longer operational broken. Transmitter requires factory service.
3	PLLLockFailed	Antenna circuit error. The circuitry that controls the antenna is no longer operational. Transmitter requires factory service.
6	AuthFailed	Auth IC read failed.
7	sysbusy	Processor is slow or is not processing requests. This can occur with low voltage. Check power supply for an unexpected drawing down of power. Also check transmitter for a large amount of data is being requested.
8	LowPower	Low voltage. Check the power supply for an unexpected drawing down of power.
9	DSPCommErr	Communication with DSP error. Possible communication serial port being broken, or the DSP fails to start.
10	CmdParseErr	Debug error.
11	ADErr	Radar front end read AD data error.
13	DspAuthErr	Auth IC read failed.
14	NoSignalErr	Has no valid echo signal. Check the EchoCurve for an unusual signal return.
15	BlueToothErr	Bluetooth module unit failed.

NAVIGATION MENU

From the Sensor's Menu, press the Navigation Bar to view the Navigation Menu.

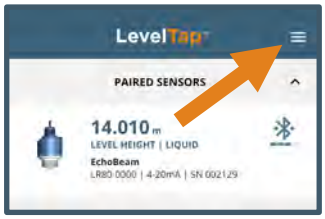



Use the Navigation Menu to access unique features included with the LevelTap™ App.

- **Sensors** – Returns to the Sensor's Menu.
- **Configuration** – Lists all saved configurations on the Smartphone.
- **Documentation** – Provides links to technical documents that support EchoBeam®. Access to the internet (via Cellular or Wi-Fi) is required.
- **Technical Support** – Contact Flowline via phone, Email or Chat.
- **About LevelTap™** - Provides a brief description of the LevelTap™ App and License Agreements.
- **About Flowline** – Provides a brief description of Flowline™.
- **Account** – Reviews the basic information provided to the LevelTap™ App including general Account, Privacy and Security Settings.
- **Notifications** – Lists all configurations that have been sent to the LevelTap™ App. An orange dot will appear if the configuration has not been imported.
- **Help** – Lists different options for getting help with the LevelTap™ App or with the level transmitter. Options include access to documentation, technical support, etc.
- **Log Out** – Logs out the end user from the LevelTap™ App.

SENSORS

This returns to the Sensors Menu.

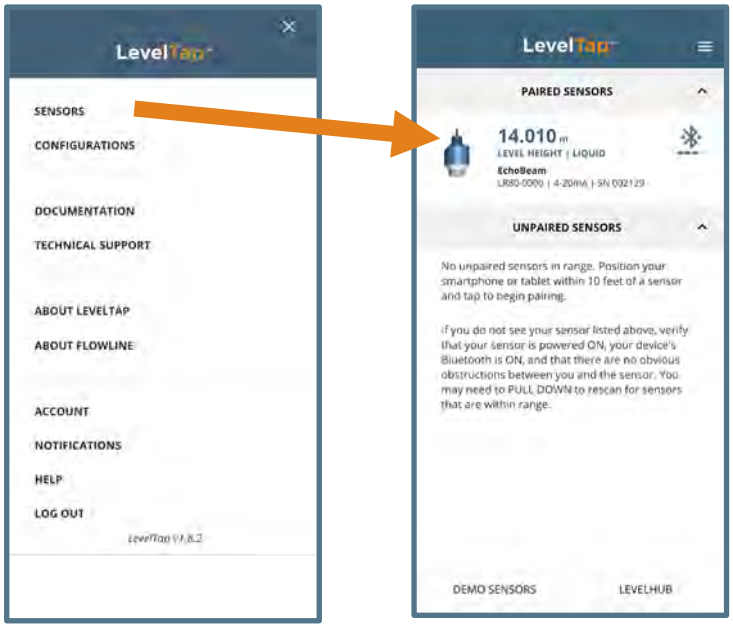

CONFIGURATIONS

This feature lists all saved configurations. Pressing any saved configuration will show the key configuration settings for that configuration.

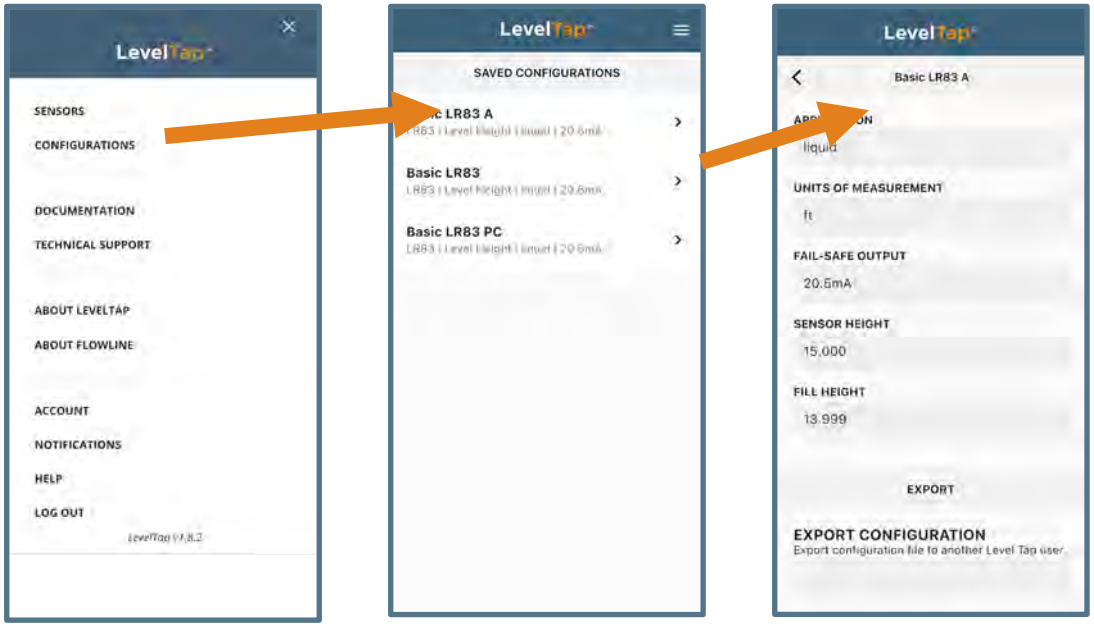

DOCUMENTATION

This feature provides links to technical documents that support EchoBeam®. Access to the internet (via Cellular or Wi-Fi) is required.

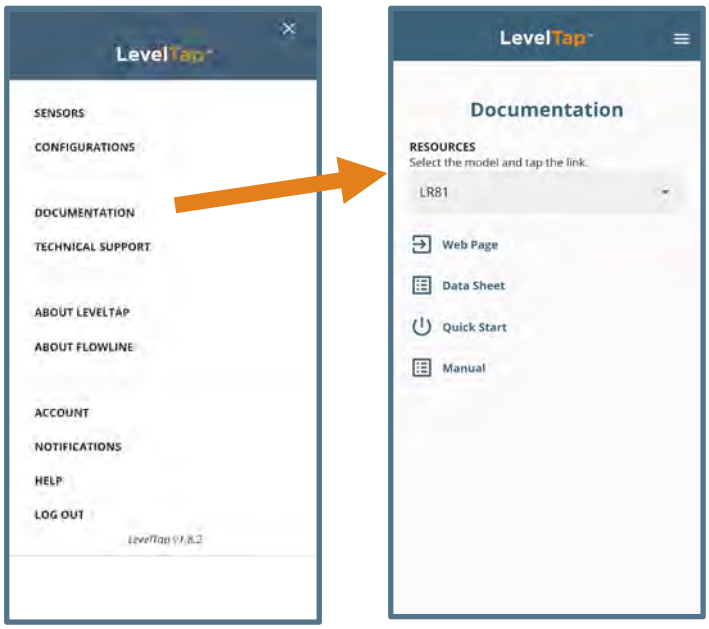

- Web Page
- Data Sheet
- Quick Start
- Manual

TECHNICAL SUPPORT

LevelTap™ support is available via phone during business hours or email anytime.

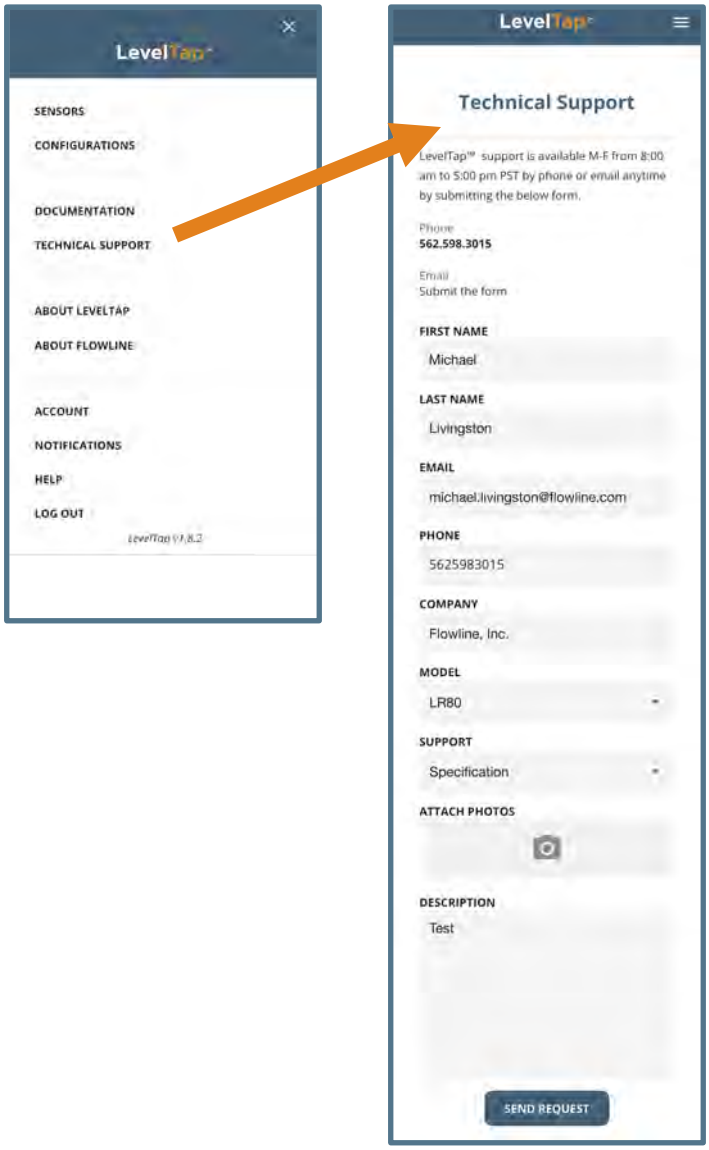

ABOUT LEVELTAP

This feature provides a brief description of the LevelTap™ App as well as Release Notes and License Agreements.

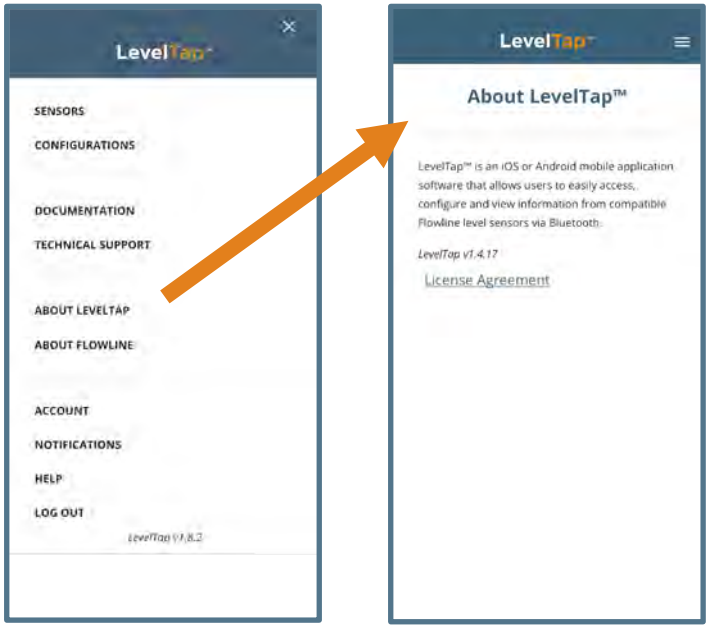

ABOUT FLOWLINE

This feature provides a brief description of Flowline™.

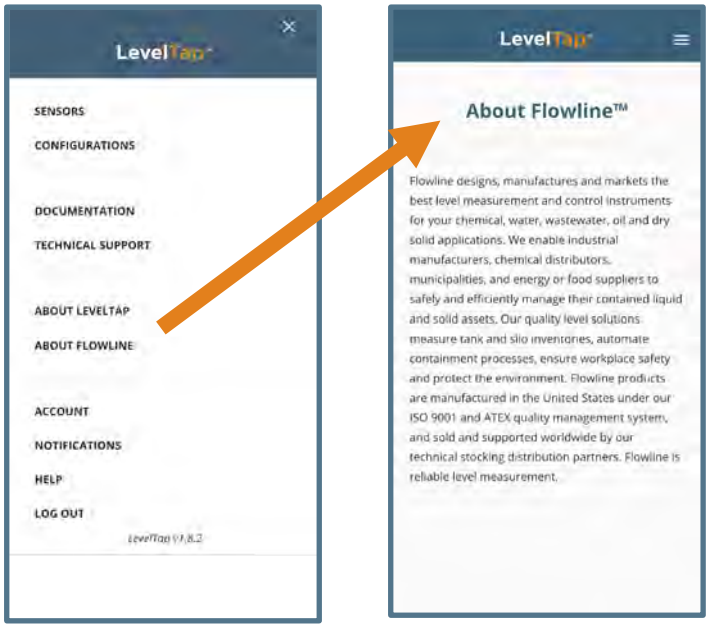

ACCOUNT

This feature reviews the basic information provided to the LevelTap™ App.

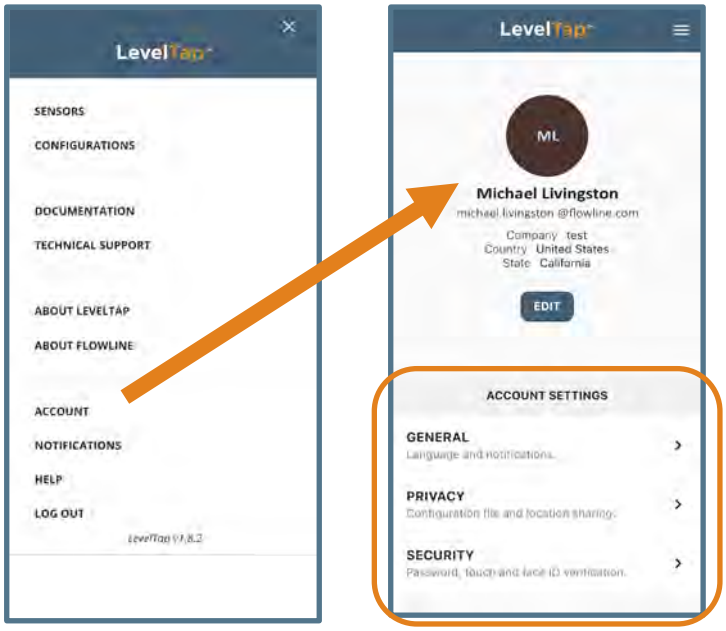

- **General**

  Language, Auto-Pair and Notifications.

- **Privacy**

  Location sharing.

- **Security**

  Password, touch and Face ID verification.

GENERAL

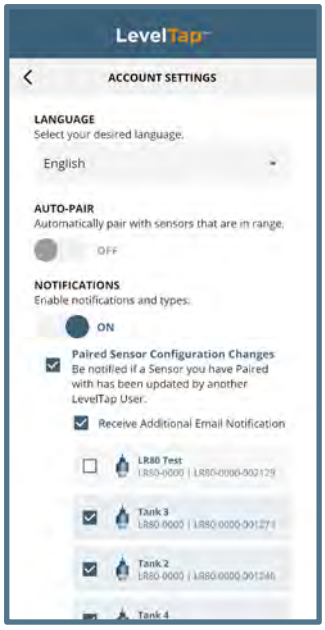

- **Language**
  Select between English, Spanish, Mandarin, French, Portuguese, Portuguese (Brazil), German, Italian, Korean, and Japanese.
- **Auto-Pair**
  Use to automatically pair LevelTap App with sensors that are in range.
- **Notifications**
  Select the types of notifications LevelTap users will receive.
  - Top selector decides if your Smartphone will receive notifications or not.
  - Paired Sensor Configuration Changes
    - Click to be notified if a sensor you have paired with has been updated by another LevelTap user.
    - Click to receive additional Email notifications.
    - List of all sensors previously paired to your Smartphone. Individual sensors can be uncheck to stop notifications from being sent to your Smartphone.
  - Shared Configuration – Select to be notified when another LevelTap User shares a configuration with you. There is an option to receive Emails as well.

PRIVACY

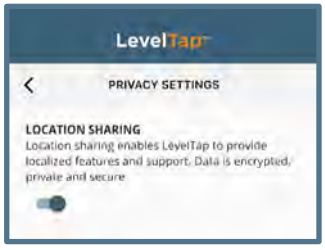

- **Location Sharing**

  Sharing your location will allow Flowline to better respond and communicate. Your location data will always be kept private and secure.

Note: When first pairing to a sensor, Location Sharing must be turned on to complete the pairing.

SECURITY

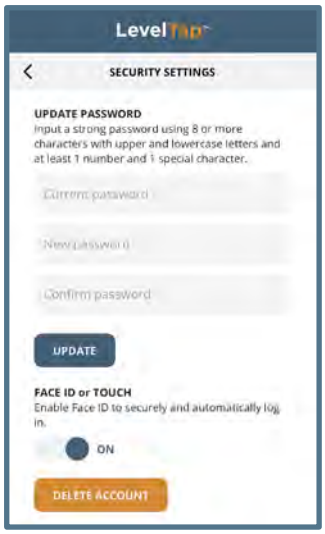

- **Update Password**

  This feature allows for the updating of the LevelTap account password.

  Use a strong password using at least 8 characters, upper and lowercase letters, at least one number, and at least one special character.

- **Face ID or Touch**

  Enable Face ID to securely and automatically log in.

- **Delete Account**

  Use this to permanently delete your LevelTap account. This cannot be undone when clicked.

NOTIFICATIONS

This feature lists all configurations that have been sent to the LevelTap™ App. An orange dot will appear if the configuration has not been imported.

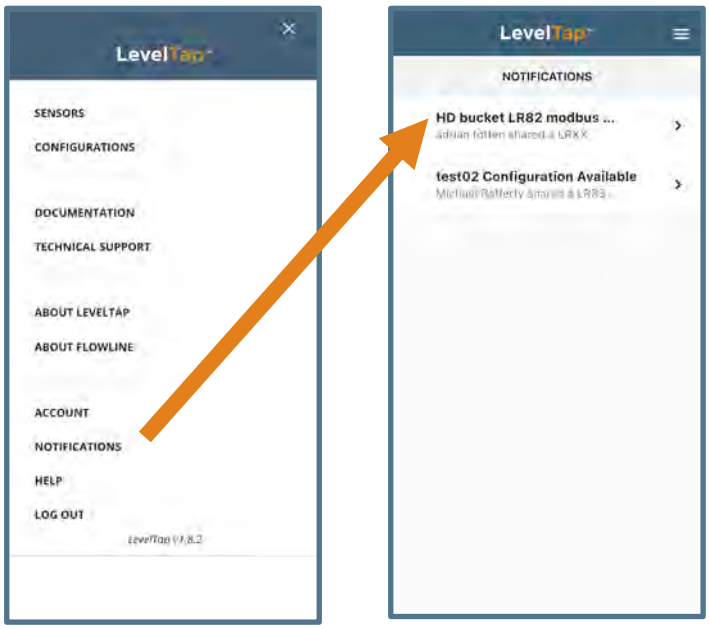

HELP

This feature lists different options for getting help with the LevelTap™ App or with the level transmitter. Options include access to documentation, technical support, etc.

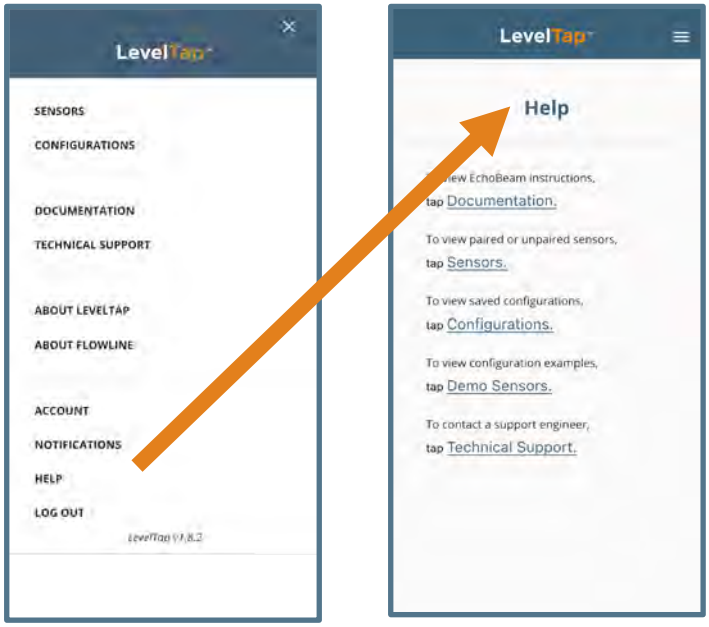

LOG OUT

This feature logs out the end user from the LevelTap™ App. When Log Out is selected, your session with LevelTap™ will end.

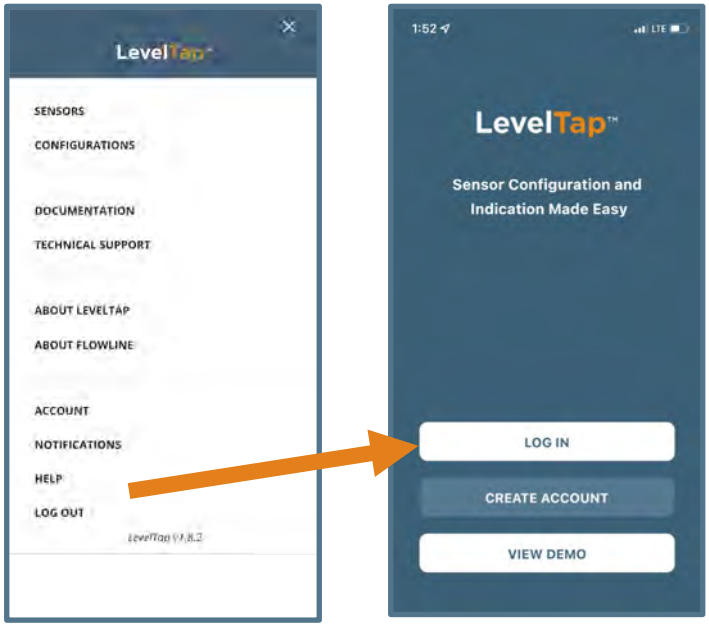

FACTORY SETTINGS

Below are the Sensor Height (4mA) and Fill-Height (20mA) factory settings for each sensor.

Sensor Name	LR81	LR81	LR83	LR85
Application	Liquids	Liquids	Liquids	Solids
Units of Measurement	Ft	Ft	Ft	Ft
Fail-Safe Output	20.5mA	20.5mA	20.5mA	20.5mA
Sensor Height	32.81 ft	98.42 ft	98.42 ft	393.7 ft
Fill-Height	32.31 ft	97.92 ft	97.92 ft	393.2 ft
Display Value	Liquid Height	Liquid Height	Liquid Height	Liquid Height
Dead Band	0.45 ft	0.45 ft	0.45 ft	0.45 ft
Maximum Range	34.45 ft	103.33 ft	103.33 ft	413.4 ft
Tank Conditions				
Low Dielectric	No	No	No	No
Surface Agitation	None	None	None	None
Fast Fill Rate	0.659 ft	0.659 ft	0.659 ft	0.659 ft
Multiwave	No	No	No	No
Near Band Detect	Off	Off	Off	Off
Signal Properties				
First Echo	Normal	Normal	Normal	Normal
False Echo Memory	0	0	0	0
Echo Threshold	8	8	8	8
Envelope Level	5	5	5	5
Damping Time	60	60	60	60

LR80 MAXIMUM LIQUID RANGE DERATION

The maximum range (under ideal conditions) for the LR80 series is 32.81' (10m). There are several factors which will reduce the maximum range of the radar transmitter. The two key factors are the dielectric constant for the liquid being measured and the surface of the liquid.

Dielectric Constant Ranges:

- **Medium Dielectric**
  - (4.0 to 10.0)
- **Low Dielectric**
  - (2.0 to 4.0)
- **Extreme Low Dielectric**
  - (1.6 to 2.0)

Surface of the Liquid:

- **Moving Surface** – a surface that has some movement such as seen when a vessel is filled from the top or from a quick laminar stream flow.
- **Turbulent Surface** – a surface that has great movement from an agitator/mixer or from a quick turbulent stream flow

Moving Surface

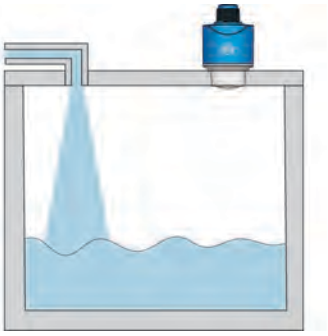

Turbulent Surface

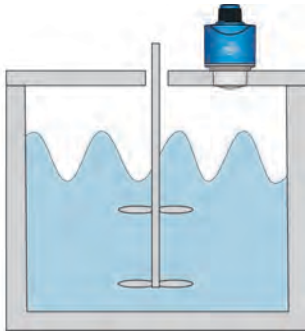

The dielectric constant and reflective surface will affect the maximum range as follows:

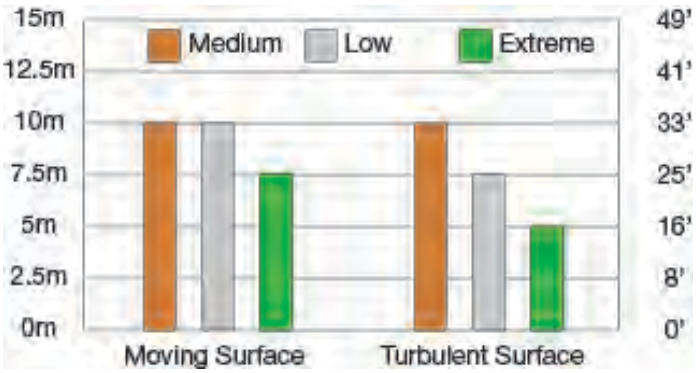

Dielectric	Surface	Max. Range
Medium	Moving	10m
	Turbulent	10m
Low	Moving	10m
	Turbulent	7.5m
Extreme Low	Moving	7.5m
	Turbulent	5m

Note: There is no expected reduction of range with the LR80 series within Still Surfaces or in High Dielectric liquids (value of 10 or greater).

LR81 MAXIMUM LIQUID RANGE DERATION

The maximum range (under ideal conditions) for the LR81 series is 98.42’ (30m). There are several factors which will reduce the maximum range of the radar transmitter. The two key factors are the dielectric constant for the liquid being measured and the surface of the liquid.

Dielectric Constant Ranges:

- **High Dielectric**
  - (10.0 and greater)
- **Medium Dielectric**
  - (4.0 to 10.0)
- **Low Dielectric**
  - (2.0 to 4.0)
- **Extreme Low Dielectric**
  - (1.6 to 2.0)

Surface of the Liquid:

- **Still Surface** – a surface that is static such as seen in storage vessels or as liquid flows slowly down stream.
- **Moving Surface** – a surface that has some movement such as seen when a vessel is filled from the top or from a quick laminar stream flow.
- **Turbulent Surface** – a surface that has great movement from an agitator/mixer or from a quick turbulent stream flow.

Still Surface **Moving Surface** **Turbulent Surface**

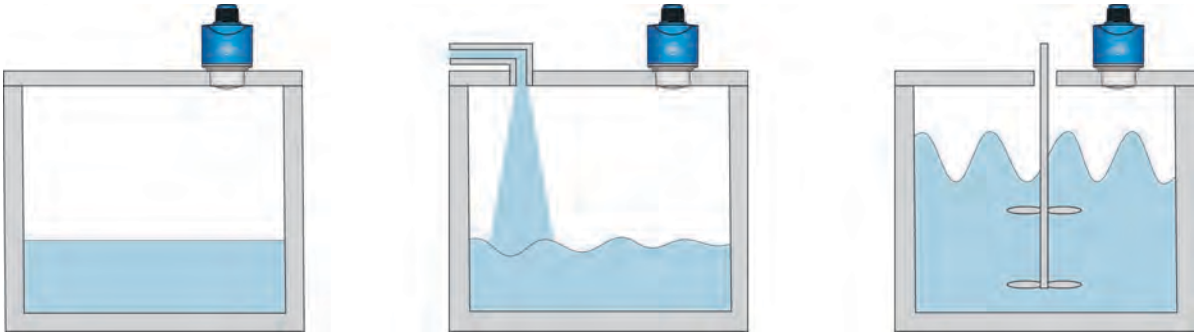

The dielectric constant and reflective surface will affect the maximum range as follows:

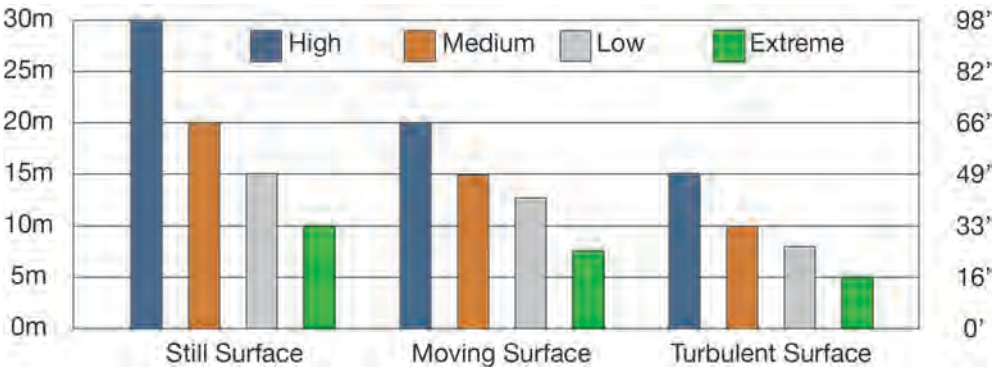

Dielectric	Surface	Max. Range
High	Still	30m
	Moving	20m
	Turbulent	15m

Dielectric	Surface	Max. Range
Low	Still	15m
	Moving	12m
	Turbulent	7m

Medium	Still	20m
	Moving	15m
	Turbulent	10m

Extreme Low	Still	10m
	Moving	8m
	Turbulent	5m

LR83 MAXIMUM LIQUID RANGE DERATION

The maximum range (under ideal conditions) for the LR83 series is 98.42' (30m). There are several factors which will reduce the maximum range of the radar transmitter. The two key factors are the dielectric constant for the liquid being measured and the surface of the liquid.

Dielectric Constant Ranges:

- **High Dielectric**
  - (10.0 and greater)
- **Medium Dielectric**
  - (4.0 to 10.0)
- **Low Dielectric**
  - (2.0 to 4.0)
- **Extreme Low Dielectric**
  - (1.6 to 2.0)

Surface of the Liquid:

- **Still Surface** – a surface that is static such as seen in storage vessels or as liquid flows slowly down stream.
- **Moving Surface** – a surface that has some movement such as seen when a vessel is filled from the top or from a quick laminar stream flow.
- **Turbulent Surface** – a surface that has great movement from an agitator/mixer or from a quick turbulent stream flow.

Still Surface **Moving Surface** **Turbulent Surface**

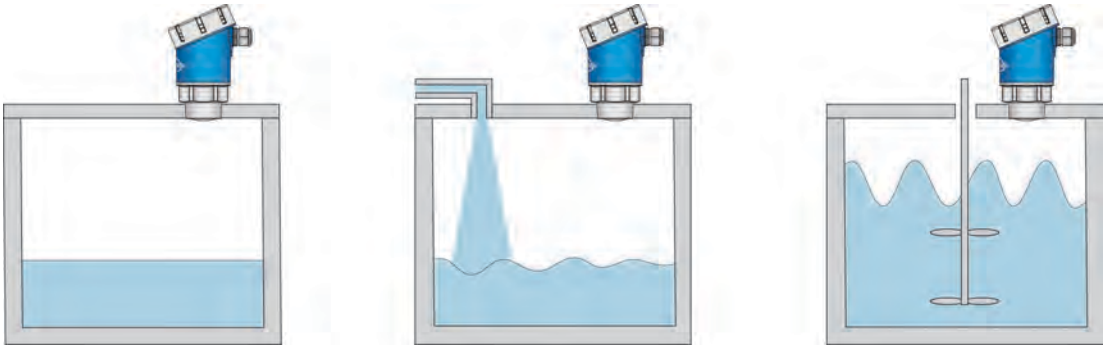

The dielectric constant and reflective surface will affect the maximum range as follows:

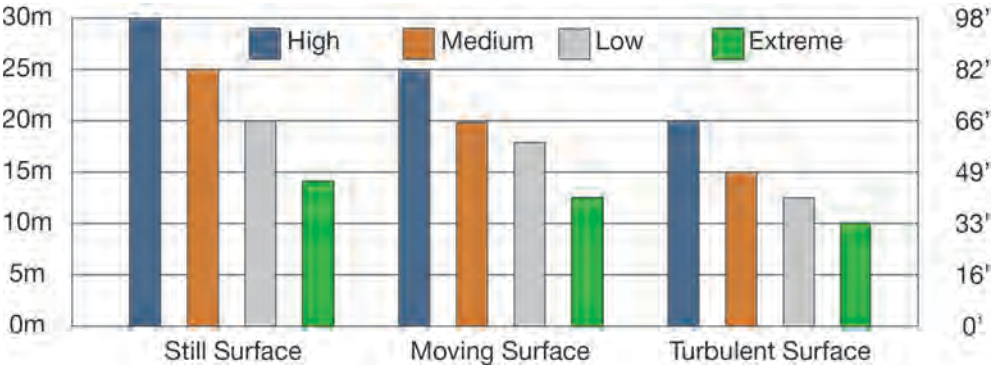

Dielectric	Surface	Max. Range
High	Still	30m
	Moving	25m
	Turbulent	20m
Medium	Still	25m
	Moving	20m
	Turbulent	15m

Dielectric	Surface	Max. Range
Low	Still	20m
	Moving	17m
	Turbulent	12m
Extreme Low	Still	14m
	Moving	12m
	Turbulent	10m

LR85 MAXIMUM LIQUID RANGE DERATION

The maximum range (under ideal conditions) for the LR85 series is 393.7’ (120m). There are several factors which will reduce the maximum range of the radar transmitter. The two key factors are the dielectric constant for the liquid being measured and the surface of the liquid.

Dielectric Constant Ranges:

- **High Dielectric**
  - (10.0 and greater)
- **Medium Dielectric**
  - (4.0 to 10.0)
- **Low Dielectric**
  - (2.0 to 4.0)
- **Extreme Low Dielectric**
  - (1.6 to 2.0)

Surface of the Liquid:

- **Still Surface** – a surface that is static such as seen in storage vessels or as liquid flows slowly down stream.
- **Moving Surface** – a surface that has some movement such as seen when a vessel is filled from the top or from a quick laminar stream flow.
- **Turbulent Surface** – a surface that has great movement from an agitator/mixer or from a quick turbulent stream flow.

Still Surface **Moving Surface** **Turbulent Surface**

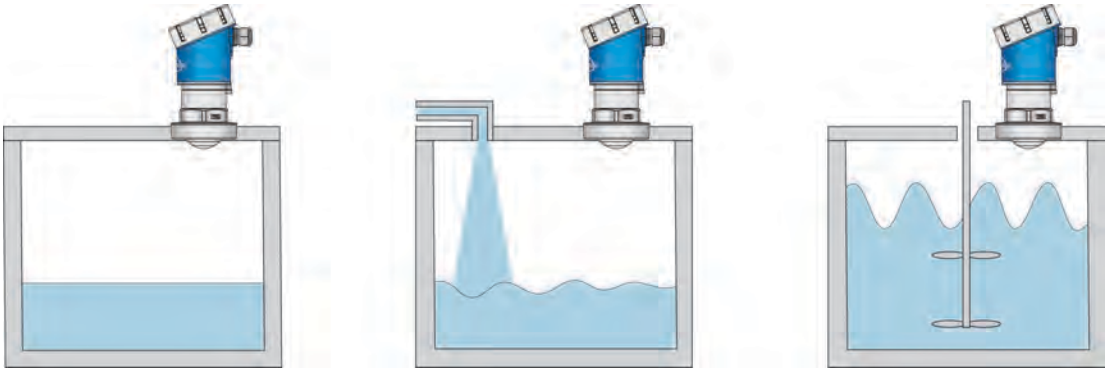

The dielectric constant and reflective surface will affect the maximum range as follows:

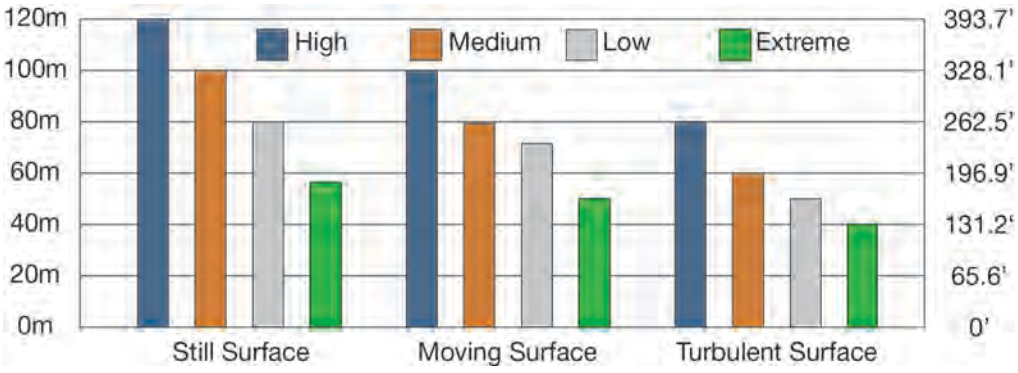

Dielectric	Surface	Max. Range
High	Still	120m
	Moving	100m
	Turbulent	80m
Medium	Still	100m
	Moving	80m
	Turbulent	60m

Dielectric	Surface	Max. Range
Low	Still	80m
	Moving	70m
	Turbulent	50m
Extreme Low	Still	55m
	Moving	50m
	Turbulent	40m

MODBUS OUTPUT DEFINITIONS

Communication Parameters:

Hardware interface:	RS485
Baud rate:	9600
Modbus RTU:	8, N, 1
Error Checking:	CRC16 polynomial A001
Default Address:	01

Modbus function codes supported:

Function 03 - Read Register(s).

Function 06 - Write Single Register

Examples:

Function 03 - Read Register(s)

Read Registers - Address = 1, starting from register 00H through 0AH (10 registers)

Host sends data (HEX):

01 03 00 00 000A c5cd

Sensor response:

01 03 14 XX-XX (20bytes) crc

Function 06 - Write Single Register

Write Register - Address = 1, 05H (Range in cm) 1000cm

Host sends data (HEX):

01 06 00 05 03e8 9975

Sensor response:

01 06 0005 03e8 9975 (write was successful)

If the return value is different, then the write failed or the data exceeded the limit

Address range supported:

00 to 99 (sensor display value)

Register Mapping:

0x0000	Distance measurement in centimeters (read only)	
0x0001	Distance measurement in millimeters (read only)	
0x0002	Level measurement in centimeters (read-only)	
0x0003	Level measurement in millimeters (read-only)	
0x0004	Measurement status (read-only)	
	0	= Normal
	1	= Comm Err - Display not connected or broken
	2	= EEProm Err - Write failure, EEPROM is broken
	3	= PLL Err - Antennae circuit is broken
	7	= SYSBUSY - Slow response due to large data request or low supply voltage
	8	= LOWPOWER - Low Voltage - check power supply
	14	= NOSIGNALERR - No valid echo signal
0x0005	Range Value in centimeters (read and write)	
0x0006	Blanking distance (dead zone) in centimeters (read and write)	
0x0007	Low-level (Sensor Height) adjustment in centimeters (read and write)	
0x0008	High-level (Fill-Height) adjustment in centimeters (read and write)	
0x0009	Signal Strength (read-only)	
	0	= Min
	150	= Max
0x000A	Distance measurement in millimeters (4-byte integer, read-only, high 16 bits)	
0x000B	Distance measurement in millimeters (4-byte integer, read-only, low 16 bits)	
0x000C	Distance measurement in meters (4-byte float, read-only, high 16 bits)	
0x000D	Distance measurement in meters (4-byte float, read-only, low 16 bits)	
0x000E	Level measurement in millimeters (4-byte integer, read-only, high 16 bits)	
0x000F	Level measurement in millimeters (4-byte integer, read-only, low 16 bits)	
0x0010	Level measurement in meters (4-byte float, read-only, high 16 bits)	
0x0011	Level measurement in meters (4-byte float, read-only, low 16 bits)	
0x0012	Temperature (4-byte float, read-only, upper 16 bits)	
0x0013	Temperature (4-byte float, read-only, lower 16 bits)	

SDI-12 OUTPUT DEFINITIONS

Serial Port Setting

SDI 1200 baud rate 1 start, 7 data, 1 parity even, 1 stop.

Supports SDI 1.4

Supported Commands

No.	Name	Command	Response
	Break	Continuous spacing for at least 12 milliseconds	None
1	Acknowledge Active	a!	a<CR><LF>
2	Send Identification	aI!	a14FLowLinemmmmmmvvvxxx,CR><LF> Manufacturer serial number and other information
3	Address Query	?!	a<CR><LF>
4	Change Address	aAb!	b<CR><LF>
5	Start Measurement	aM!	a0004<CR><LF> Response: 4
6	Start Concurrent Measurement	aC!	a00004<CR><LF> Response: 4
7	Send Data	aD0!	a+4 values: height+distance+temperature+error code a<values><CR><LF>
		aD1! ... aD9!	
8	Continuous Measurements	aR0!	a+4 values: height+distance+temperature+error code
		aR1! … aR9!	a<values><CR><LF>
9	Additional Measurements	aM1! ... aM9!	a0000<CR><LF>
10	Additional Concurrent Measurements	aC1! … aC9!	a00000<CR><LF>
11	Start Verification	aV!	a0004
12	Start Measurement and Request CRC	aMC!	Attn<CR><LF>
13	Additional Measurement and Request CRC	aMC*!	Attn<CR><LF>

Supported Commands (continued)

No.	Name	Command	Response
14	Start Concurrent Measurement and Request CRC	aCC!	Atttnn<CR><LF>
15	Additional Concurrent Measurement and Request CRC	aCC1! … aCC9!	Atttnn<CR><LF>
16	Continuous Measurements and Request CRC	aRC0! … ARC9!	A<values><CRC><CR><LF>
17	Extended Commands	Read Unit aXRDU!	a<value><CR><LF> value +0, meter; +1 feet; +2 in; +3 cm; +4 mm
18	Extended Commands	Write Unit aXWDUn!	a<value><CR><LF> value +n (0, meter; +1 feet; +2 in; +3 cm; +4 mm)
19	Extended Commands	Set the Current Stage aXSCSsss.ss!	a + time (in seconds) to respond (000), and the number of values to return (1). <value><CR><LF>
20	Extended Commands	Set False Echo Suppression aXFESddd.dd!	a + time (in seconds) to respond (000), and the number of values to return (1). <value+error code><CR><LF> Example 18.5: a0??2 0?? Wait Seconds; 2 paras for aD0! response, address (0)+18.5 +error code
21	Extended Commands	Set integration time aXWITss!	a0??2 0?? Wait Seconds; 2 paras for aD0! response, address (0)+new integration time+error code

WARRANTY

Flowline warrants to the original purchaser of its products that such products will be free from defects in material and workmanship under normal use and service in accordance with instructions furnished by Flowline for a period of two years from the date of manufacture of such products. Flowline's obligation under this warranty is solely and exclusively limited to the repair or replacement, at Flowline's option, of the products or components, which Flowline's examination determines to its satisfaction to be defective in material or workmanship within the warranty period. Flowline must be notified pursuant to the instructions below of any claim under this warranty within thirty (30) days of any claimed lack of conformity of the product. Any product repaired under this warranty will be warranted only for the remainder of the original warranty period. Any product provided as a replacement under this warranty will be warranted for the full two years from the date of manufacture.

RETURNS

Products cannot be returned to Flowline without Flowline's prior authorization. To return a product that is thought to be defective, go to www.flowline.com, and submit a customer return (MRA) request form and follow the instructions therein. All warranty and non-warranty product returns to Flowline must be shipped prepaid and insured. Flowline will not be responsible for any products lost or damaged in shipment.

LIMITATIONS

This warranty does not apply to products which: 1) are beyond the warranty period or are products for which the original purchaser does not follow the warranty procedures outlined above; 2) have been subjected to electrical, mechanical or chemical damage due to improper, accidental or negligent use; 3) have been modified or altered; 4) anyone other than service personnel authorized by Flowline have attempted to repair; 5) have been involved in accidents or natural disasters; or 6) are damaged during return shipment to Flowline. Flowline reserves the right to unilaterally waive this warranty and dispose of any product returned to Flowline where: 1) there is evidence of a potentially hazardous material present with the product; or 2) the product has remained unclaimed at Flowline for more than 30 days after Flowline has dutifully requested disposition. This warranty contains the sole express warranty made by Flowline in connection with its products. ALL IMPLIED WARRANTIES, INCLUDING WITHOUT LIMITATION, THE WARRANTIES OF MERCHANTABILITY AND FITNESS FOR A PARTICULAR PURPOSE, ARE EXPRESSLY DISCLAIMED. The remedies of repair or replacement as stated above are the exclusive remedies for the breach of this warranty. IN NO EVENT SHALL FLOWLINE BE LIABLE FOR ANY INCIDENTAL OR CONSEQUENTIAL DAMAGES OF ANY KIND INCLUDING PERSONAL OR REAL PROPERTY OR FOR INJURY TO ANY PERSON. THIS WARRANTY CONSTITUTES THE FINAL, COMPLETE AND EXCLUSIVE STATEMENT OF WARRANTY TERMS AND NO PERSON IS AUTHORIZED TO MAKE ANY OTHER WARRANTIES OR REPRESENTATIONS ON BEHALF OF FLOWLINE. This warranty will be interpreted pursuant to the laws of the State of California. If any portion of this warranty is held to be invalid or unenforceable for any reason, such finding will not invalidate any other provision of this warranty.

For complete product documentation, video training, and technical support, go to www.flowline.com.
For phone support, call 562-598-3015 from 8am to 5pm PST, Mon - Fri.
(Please make sure you have the Part and Serial number available.)