EchoPod®

Ultrasonic Liquid Level Transmitter, Switch and/or Controller

FLOWLINE™
LEVEL BEST

DL10, DL14, DL24, DL34, DS14, DX10 Series Manual



EchoPod® is an innovative level sensor family that replaces float, conductance and pressure sensors that fail due to contact with dirty, sticking and scaling media in small (< 4'/1.25m) to medium (<18'/5.5m) tall tanks. Applied in skid, machine, tool and process applications, the general purpose sensors are available with single and multi-function capabilities including measurement, switching and control logic.

TABLE OF CONTENTS

Specifications: 3
Dimensions: 4
Safety Precautions: 5
Components: 6
Getting Started: 7
- USB® Fob Interface: 8
- Configuring EchoPod® with WebCal®: 9
  - Relay Configuration: 9
  - Tank Shape: 10
  - Tank Level Configuration: 10
  - Write to Unit: 11

Wiring: 12
- Wiring EchoPod®: 12
- PodView to EchoPod®: 12
- Wire Connections: 13
- Wiring to Displays, Controllers and PLC's 14
- Switch Inductive Loads: 15
- Voltage Output (DL10, DL14, DL24 & DL34 series only): 15

Installation: ……. 16
- Mounting Guide: 16
- Installation in Existing Fittings: 16
- Metal Tanks: 16
- Fitting Selection: 17
  - Tank Adapter: 17
  - Riser: 17
  - Flange: 18
  - Side Mount Fitting: 18
  - Stand Pipe: 19

Advanced Features: 20
Appendix: 21
- Updating and Demo Tabs: 21
- Factory Defaults: 22
- Troubleshooting: 23

Warranty, Returns and Limitations: 24

Range:	DL10/DL14: 49.2” (1.25m) DS14/DX10: 49.2” (1.25m) DL24: 9.8’ (3.0m) DL34: 18.0’ (5.5m)
Accuracy:	DL10/DL14: 0.125” (3mm) DS14/DX10: 0.125” (3mm) DL24/DL34: +/- 0.2% of range
Resolution:	DL10/DL14: 0.019” (0.5mm) DS14/DX10: 0.019” (0.5mm) DL24: 0.039” (1mm) DL34: 0.079” (2mm)
Dead band:	DL10/DL14/DS14/DX10: 2” (5 cm) DL24: 4” (10 cm) DL34: 8” (20 cm)
Beam width:	DL10/DL14/DL24: 2” (5cm) dia. DS14/DX10: 2” (5cm) dia. DL34: 3” (7.6cm)
Configuration:	*WebCal® PC Windows USB ® 2.0
Memory:	Non-volatile
Supply voltage:	DL10/DL14: 24 VDC (loop) DL24/DL34: 24 VDC (loop) DS14: 12-24 VAC/VDC DX10: 12-28 VDC
Consumption:	0.5 W
Loop resistance:	DL__: 400 Ohms max
Signal output:	DL__: 4-20 mA, two-wire DX10: 0-5V, 0-10V, 976-2000Hz
Frequency:	DX10 only: sink current, 15 mA nominal
Signal invert:	DL__: 20-4 mA DX10: 5-0V, 10-0V, 2000-976Hz

Signal fail-safe:	DL__: 4 mA, 20 mA, 21 mA, 22 mA or hold last DX10: Full, empty or hold last
Contact type:	DL_4/DS14: (4) SPST relays
Contact rating:	DL_4/DS14: 60 VA, 1A maximum
Contact fail-safe:	DL_4/DS14: Power loss: Hold last, Power on: Open, close or hold last
Hysteresis:	DL_4/DS14: Selectable
Process temp.:	F: 20° to 140° C: -7° to 60°
Temp. comp.:	Automatic
Ambient temp.:	F: -31° to 140° C: -35° to 60°
Pressure:	MWP = 30 PSI
Enclosure rating:	Type 6P encapsulated, corrosion resistance & submersible
Encl. material:	Polycarbonate
Strain relief material:	Santoprene
Trans. material:	Polyvinylidene Fluoride (PVDF)
Cable jacket material:	Polyurethane
Cable type:	9-conductor, shielded
Cable length:	48” (1.2 m)
Process mount:	DL10/DL14/DS24: 1” NPT (1” G) DS14/DX10: 1” NPT (1” G) DL34: 2” NPT (2” G)
Mount gasket:	Viton®
Classification:	General purpose
Compliance:	CE, RoHS
Approvals:	cFMus

* For complete information on the WebCal® software, please refer to the WebCal® manual located at www.flowline.com/webcal-software.

Dimensions

DL34 Series

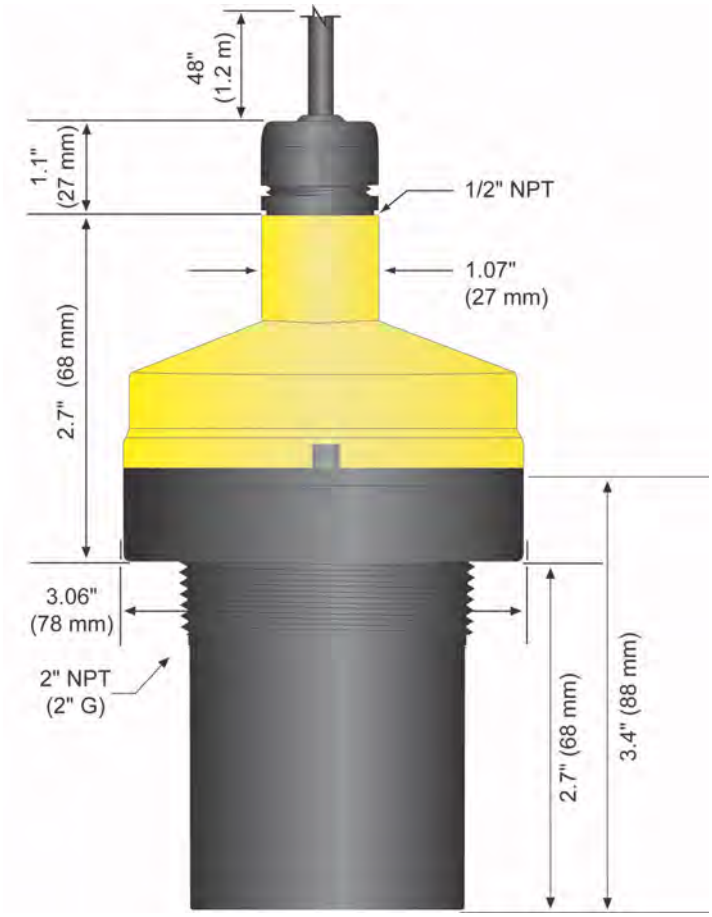

DL24 Series

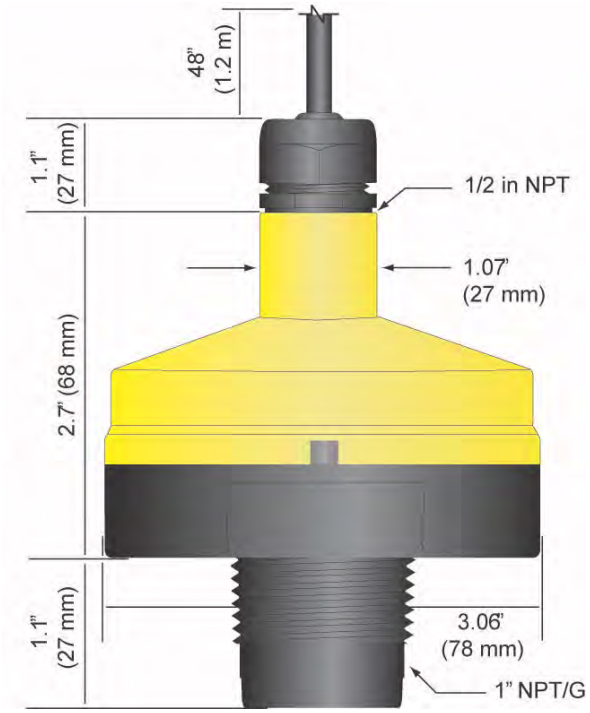

DL10, Series

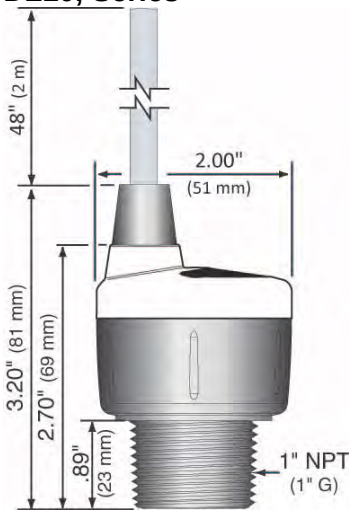

DL14 Series

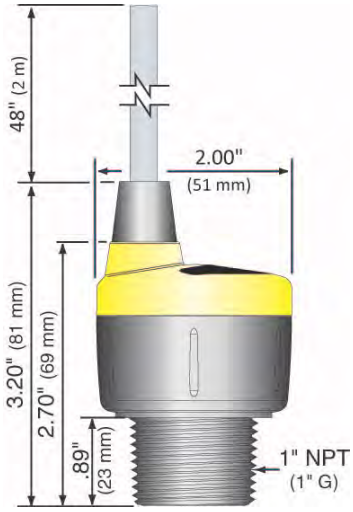

DS14 Series

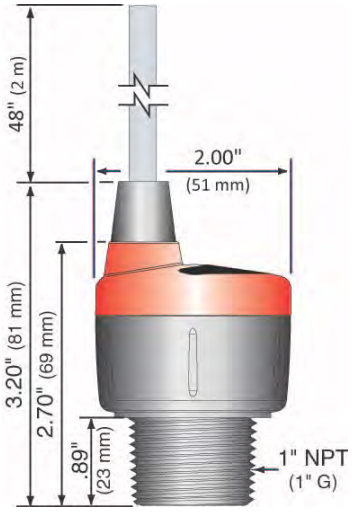

DX10 Series

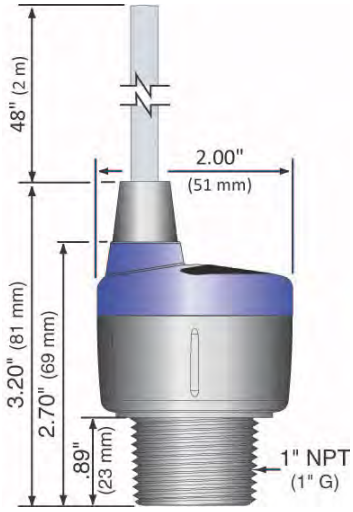

About this Manual: PLEASE READ THE ENTIRE MANUAL PRIOR TO INSTALLING OR USING THIS PRODUCT. This manual includes information on the EchoPod® series Ultrasonic Level transmitter from FLOWLINE. Please refer to the part number located on the sensor label to verify the exact model configuration, which you have purchased.

⚠ **User's Responsibility for Safety:** Flowline manufactures a broad range of level sensing technologies. While each of these sensors is designed to operate in a wide variety of applications, it is the user's responsibility to select a sensor model that is appropriate for the application, install it properly, perform tests of the installed system, and maintain all components. The failure to do so could result in property damage or serious injury.

⚠ **Proper Installation and Handling:** Only professional staff should install and/or repair this product. Install the transmitter with the included Viton gasket and never over tighten the transmitter within the fitting. Always check for leaks prior to system start-up.

⚠ **Wiring and Electrical:** A supply voltage of 12 to 28 VDC is used to power the EchoPod® . Electrical wiring of the transmitter should be performed in accordance with all applicable national, state, and local codes.

⚠ **Material Compatibility:** The enclosure is made of Polycarbonate (PC). The transducer is made of Polyvinylidene Fluoride (PVDF). Make sure that the model, which you have selected, is chemically compatible with the application media.

⚠ **Enclosure:** While the transmitter housing is liquid-resistant the EchoPod® is not designed to be operational when immersed. It should be mounted in such a way that the enclosure and transducer do not come into contact with the application media under normal operational conditions.

⚠ **Safety**

- Installation should be done by properly trained staff.
- Supply voltage should never exceed a maximum of 28 VDC.
- Make sure the sensor is chemically compatible with your application.
- Design a fail-safe system that accommodates the possibility of sensor and/or power failure.
  - EchoPod® uses latching relays. When power is removed to the sensor, the relays will remain in their last state. Ex: If the relay is energized, when power is removed, the relay will remain in an energized state.
- **This sensor should not be used in classified hazardous environments.**

⚠ **Make a Fail-Safe System:** Design a fail-safe system that accommodates the possibility of transmitter and/or power failure. Flowline recommends the use of redundant backup systems and alarms in addition to the primary system.

Flammable, Explosive or Hazardous Applications
EchoPod® should not be used within classified hazardous environments.

⚠ **Warning:** Always use the Viton gasket when installing the EchoPod®, and make sure that all electrical wiring of the switch is in accordance with applicable codes.

COMPONENTS

EchoPod® is offered in different models. Depending on the model purchased, you may or may not have been shipped all the components shown below. You do however, need an EchoPod®, USB® Fob and Viton® gasket to configure, install and operate EchoPod®.

P/N	Max. Range	Dead Band	Thread	Fob	* Outputs
DL10-00	4.1' (1.25m)	2" (5cm)	1" NPT	No Fob	1
DL10-01				Fob Included	
DL10-10			1" G	No Fob	
DL10-11				Fob Included	
DL14-00			1" NPT	No Fob	1,2
DL14-01				Fob Included	
DL14-10			1" G	No Fob	
DL14-11				Fob Included	
DL24-00	9.8' (3.0m)	4" (10cm)	1" NPT	No Fob	
DL24-01				Fob Included	
DL24-10			1" G	No Fob	
DL24-11				Fob Included	
DL34-00	18.0' (5.5m)	8" (20cm)	2" NPT	No Fob	
DL34-01				Fob Included	
DL34-10			2" G	No Fob	
DL34-11				Fob Included	
DS14-00	4.1' (1.25m)	2" (5cm)	1" NPT	No Fob	2
DS14-01				Fob Included	
DS14-10			1" G	No Fob	
DS14-11				Fob Included	
DX10-00			1" NPT	No Fob	3, 4
DL10-01				Fob Included	
DX10-10			1" G	No Fob	
DX10-11				Fob Included	

- Viton® Gasket (O-ring)
  - Part #204038 – used with DL10, DL14, DS14 & DX10 series
  - Part #200128 – used with DL24 series
  - Part #200129 – used with DL34 series
- USB® Fob (DL__-_1, DS__-_1 & DX__-_1 only)
  - Part #LI99-2001
- Quick Start Guide
- *Outputs
  1. 4-20 mA, loop powered output
  2. 4 SPST 60 VA relays
  3. Voltage (0 to 2.5, 5 or 10 VDC) output
  4. Frequency (976-2000Hz.) output

EchoPod® is configured through WebCal®*, a PC software program. WebCal® is a free download from Flowline's website. **You must download and install WebCal® prior to plugging in the USB® Fob.** Please go to .flowline.com/webcal-software, and select your language version.

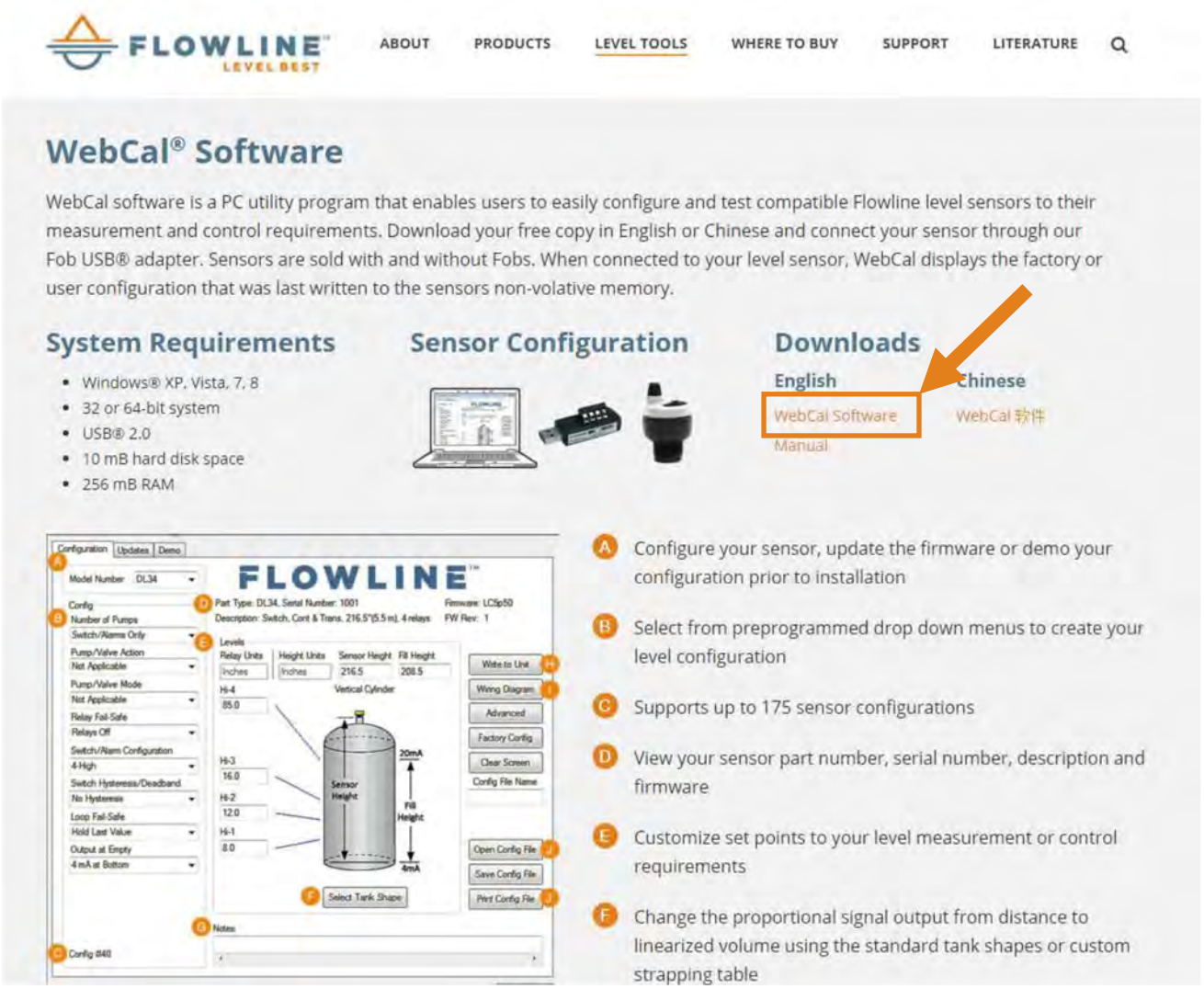

WEBCAL® SYSTEM REQUIREMENTS

Windows® XP, Vista, 7, 8, 10
32 or 64-bit system
1 USB® 2.0 port
10 mB hard drive space
256 mB RAM
Internet connection

* For complete information on the WebCal® software, please refer to the WebCal® manual located at www.flowline.com/webcal-software.

USB® FOB INTERFACE

EchoPod® communicates with WebCal®* through a USB® interface called a Fob. Before plugging your Fob into your computer's USB® port, be sure that you have installed WebCal® on your computer.

Connect the red, green, white and black wires from EchoPod® into the correct terminals on the Fob. Tighten the screws on the terminals and plug your Fob into the USB® port of your computer.

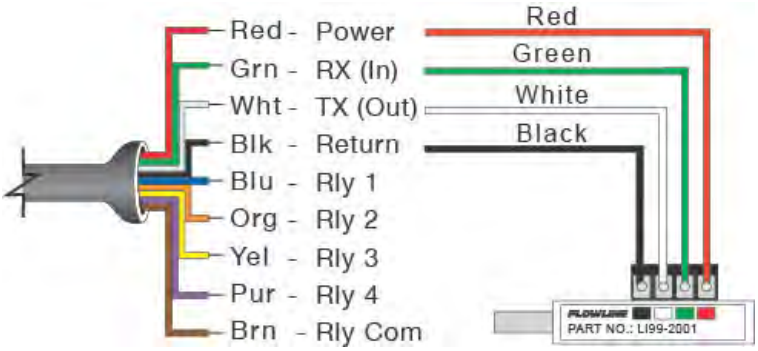

Wiring is identical for all EchoPod® Series - Use only the Black, White Green and Red wires.

- EchoPod® models DL10, DL14, DL24, DL34, DS14 and DX10 series are all compatible with both the LI99-1001 Fob as well as the LI99-2001 Fob.
- The maximum cable distance between the computer and EchoPod® is 15'. This only applies when configuring the EchoPod®.
- Once EchoPod® is configured and prior to installation, isolate the white and green wires from active power to prevent a short of the configuration circuit.
- **Note:** When using the Fob, do not add VDC or VAC power. The Fob, when connected to the computer, will provide the required power to the EchoPod®.
- * For complete information on the WebCal® software, please refer to the WebCal® manual located at www.flowline.com/webcal-software.

With EchoPod® connected to your computer, open the WebCal®* software by clicking on the WebCal® icon. Follow steps 1-4 to configure the transmitter. Click “Help” in the lower right hand corner and open the help menu of WebCal® for instructions on WebCal®. If you need additional assistance using WebCal®, please contact a Flowline applications engineer at (562) 598-3015. *For complete information on the WebCal® software, please refer to the WebCal® manual located at .flowline.com/webcal-software.

CONFIGURING ECHOPOD® WITH WEBCAL®

1. Output Configuration
    a. Configures the relays in terms of pump/valve operations as well as high or low alarms.
    b. Sets fail-safe for the relays and the sensor’s output (current, voltage or frequency).
2. Tank Shape Selection
    a. Defines the shape of the tank as well as the dimensional information for the tank with respect to the sensor’s location on the tank.
3. Tank Level Configuration
    a. Enters the settings for the relay activation points as well as confirms the operational range.
4. Write to Unit
    a. Uploads the configuration into the sensor.
    b. Provides a custom wiring diagram specific to the signal output and/or relay configuration.

OUTPUT CONFIGURATION

Configures the relays in terms of pump/valve operations and level alarms as well as the setting fail-safe for relays and signal output.

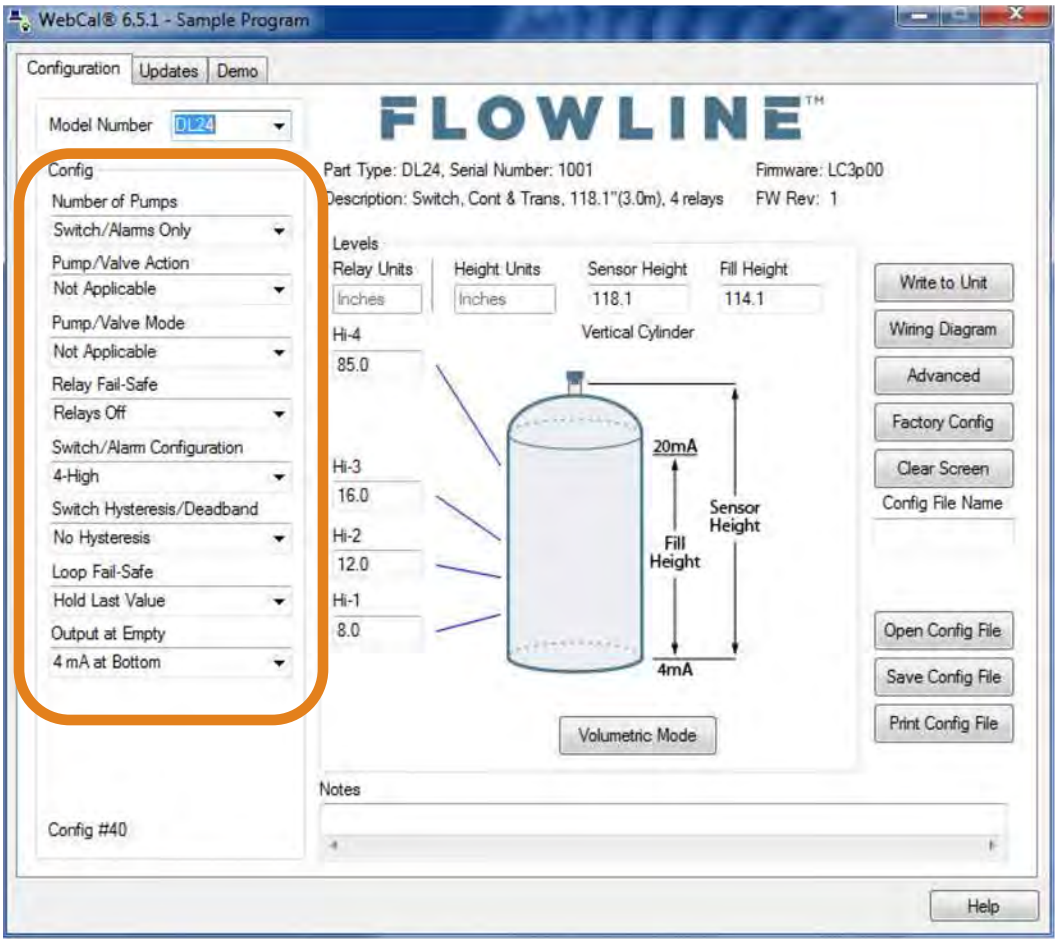

TANK SHAPE SELECTION

Defines the shape of the tank as well as the dimensional information for the tank with respect to the sensor's location on the tank.

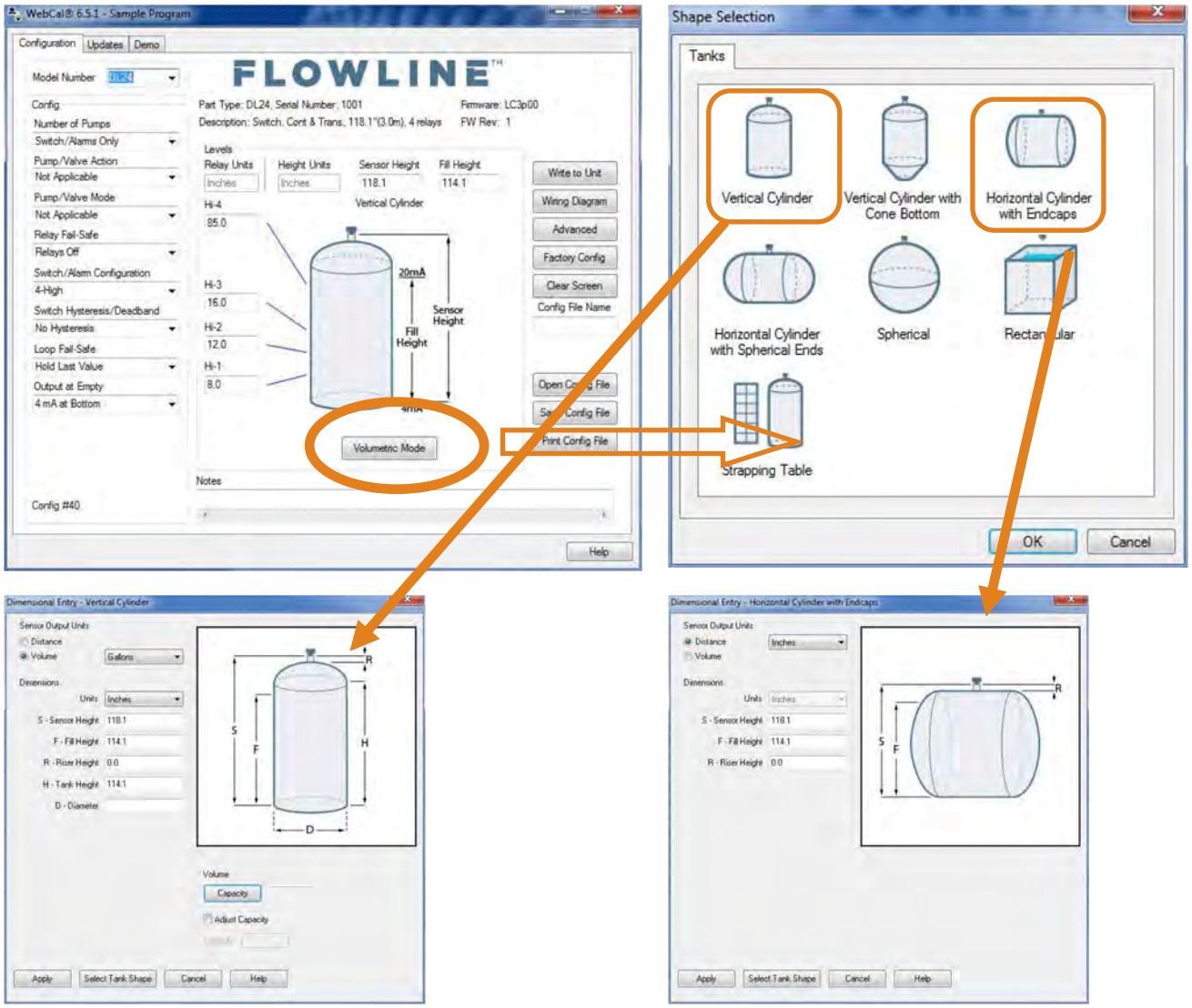

TANK LEVEL CONFIGURATION

Enters the settings for the relay activation points as well as confirms the operational range

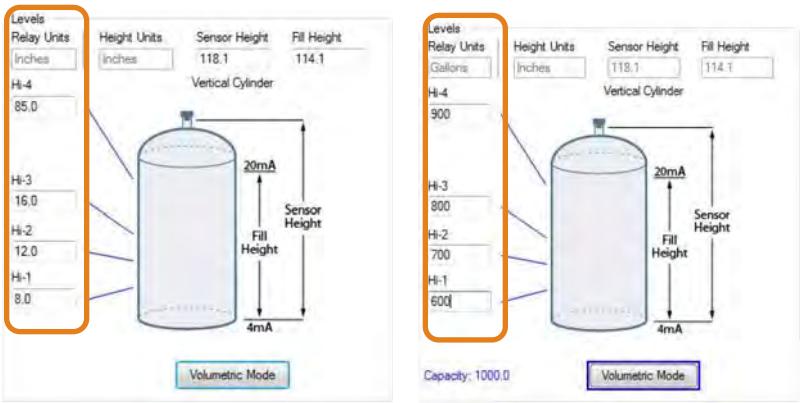

WRITE TO UNIT

This WebCal®* operation uploads configuration into the sensor, provides a custom wiring diagram specific to the signal output, and saves the configuration file to your hard drive.

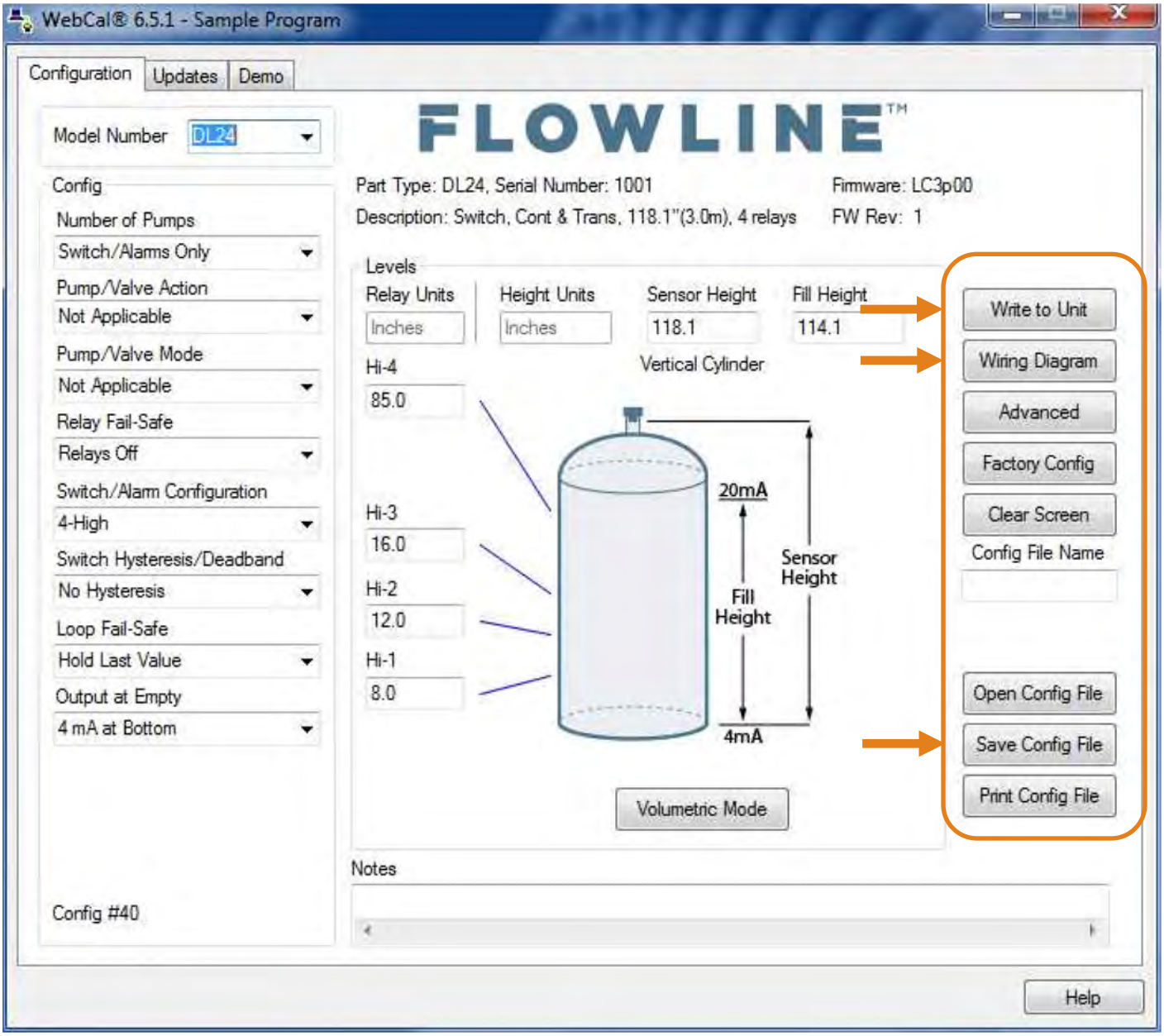

* For complete information on the WebCal® software, please refer to the WebCal® manual located at www.flowline.com/webcal-software.

WIRING DIAGRAM SAMPLE

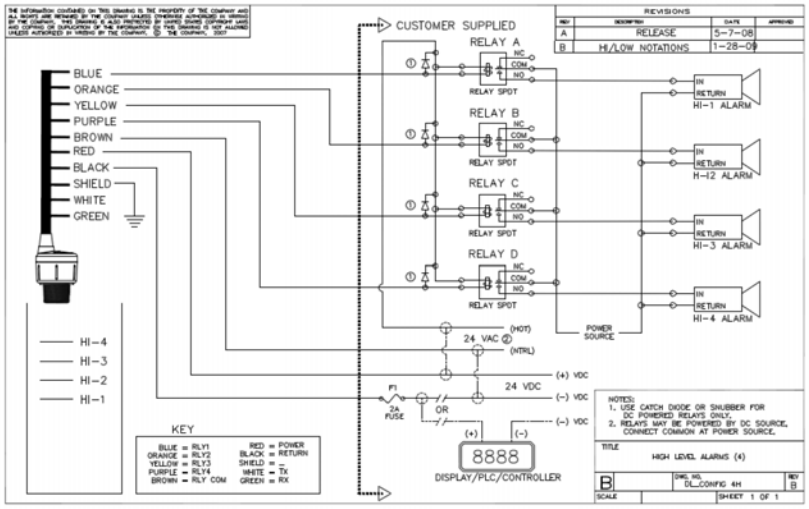

Diagram will change based upon the configuration of the EchoPod®. Use WebCal® to view appropriate wiring diagram.

WIRING ECHOPOD®

Once EchoPod® has been configured, follow the Wiring Diagram provided by the WebCal® software. A typical wiring diagram is shown above. Flowline recommends using a qualified licensed electrician to wire EchoPod® with your application's components.

- ⚠ Configure your EchoPod® with WebCal® and use the wiring diagram button to view the appropriate diagram. Each configuration will have its own unique diagram. The diagram shown above is only a sample and should not be used as a wiring diagram.
- ⚠ Always use stepper relays between the sensor and external loads. For DC circuits, always use a catch diode such as 1N4148, shown on the Wiring diagram above supplied by WebCal®.
- ⚠ Once EchoPod® is configured, isolate the white and green wires from active power to prevent a short of the configuration circuit.

WIRING PODVIEW® TO ECHOPOD®

Both sets of Red and Black wires will connect to the Power Supply. The Green and White wires on the EchoPod® will connect directly to the corresponding Green and White wires on the PodView®.

EchoPod®



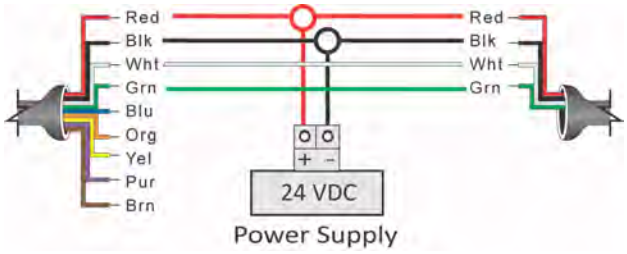

PodView®



Wiring is identical for all EchoPod® models – Use only the Red, Black, Green and White wires.

The maximum cable distance between PodView® and EchoPod® is 15'

WIRE CONNECTIONS

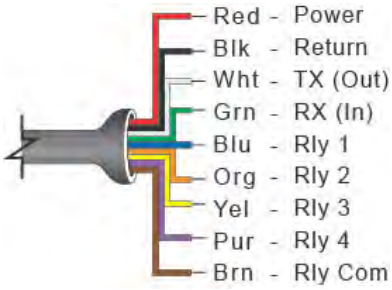

DL14, DL24, DL34 & DS14 Series

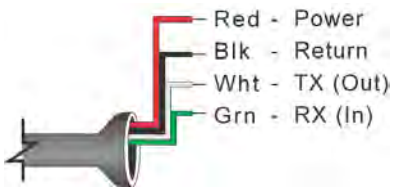

DL10 Series

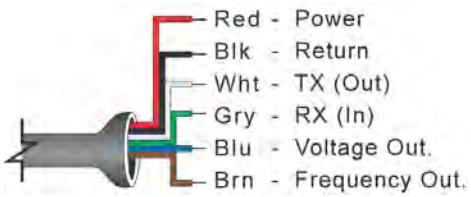

DX10 Series

VOLTAGE OUTPUT

Red & Black: Red (Power) and Black (Return) leads are for connection to a 24 VDC power supply or to a 4-20 mA loop power source (DL10, DL14, DL24 & DL34 series only). The red and black wires can be extended up to 1,000 feet using a 22-gauge or larger wire; however do not extend the green and white wires beyond 15'.

White & Green: White (TX) and Green (RX) leads are reserved for use with WebCal® and PodView® communication and should not be connected during usage in the application. These wires should not be connected to WebCal® while power is supplied from any source other than the LI99 series Fob. The maximum cable distance between the computer and EchoPod® is 15'.

Never allow the white or green wires to touch any power supply.

Blue, Orange, Yellow, Purple & Brown – (DL14, DL24, DL34 & DS14 Series only): Blue (RLY1), Orange (RLY2), Yellow (RLY3) & Purple (RLY4) wires are the relay contacts (normally open) from each of the relays respectively. The Brown wire (RLY Common) is the common for all the relays. Relay selection is determined by the configuration in WebCal®.

> **Note:** EchoPod® uses latching relays. When power is removed to the sensor, the relays will remain in their last state. Ex: If the relay is energized, when power is removed, the relay will remain in an energized state.

Blue & Brown – (DX10 Series only): Use the Brown wire for the Frequency output. Use the Blue wire for the Voltage output.

GENERAL NOTES FOR ELECTRICAL CONNECTIONS, USAGE AND SAFETY

- **Where personal safety or significant property damage can occur due to a spill, the installation must have a redundant backup safety system.**
- Wiring should always be completed by a licensed electrician.
- Supply voltage should never exceed 28 VDC.
- Do not exceed 28 VDC (28 VDC/VAC for DS14 series only) power on the relays within EchoPod®.
- Always use stepper relays between the sensor and external loads. For DC circuits use a catch diode such as 1N4148, shown on the previous page.
- Protect the sensor from excessive electrical spikes by isolating the power, whenever possible.
- The sensor materials must be chemically compatible with the liquids to be measured.
- Design a fail-safe system for possible sensor and/or power failure.
  - During power failure, relays will remain in their current state and will not change until power is restored and the signal is reacquired.
- **Never use the sensor in environments classified as hazardous.**

WIRING TO DISPLAYS, CONTROLLERS & PLC'S (DL10, DL14, DL24 & DL34 SERIES ONLY)

Below is a quick review of wiring to the most common Flowline Displays & Controllers.

DataView™ LI55 Series Level Controller

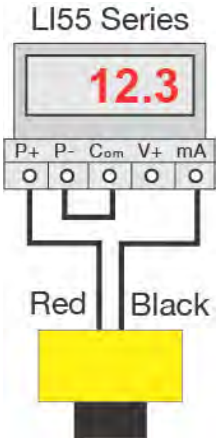

DataLoop™ LI23 Series Level Indicator Without Backlight

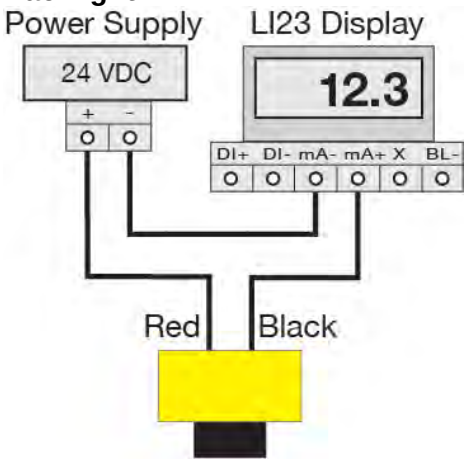

DataLoop™ LI23 Series Level Indicator With Backlight

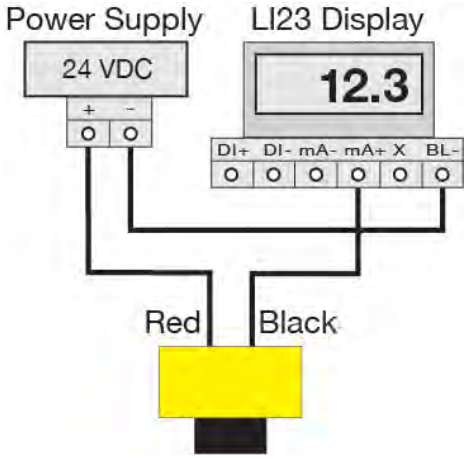

DataPoint™ LC52 Series Level Controller *JWA mode (Factory Setting)

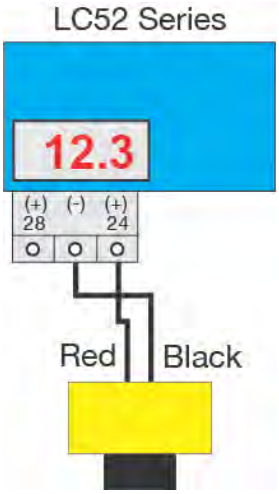

DataPoint™ LC52 Series Level Controller *JWB mode

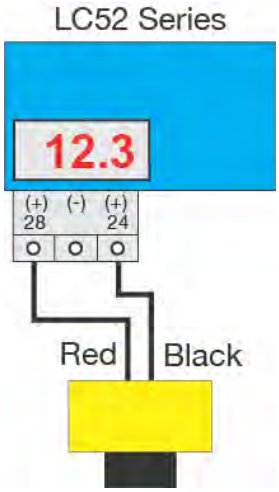

Commander™ LI90 Series Multi-Tank Level Controller

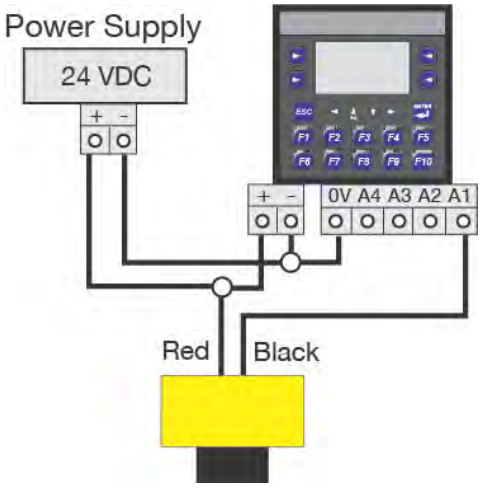

* Refer to the DataPoint™, LC52 Series, Level Controller manual for information on JWA mode and JWB mode settings in the controller.

SWITCHING INDUCTIVE LOADS

The use of suppressors (snubbers) is always recommended when switching inductive loads to prevent disrupting the microprocessor's operation. The suppressors also prolong the life of the relay contacts. Suppression can be obtained with a catch diode for DC circuits and a resistor-capacitor (RC) for AC circuits.

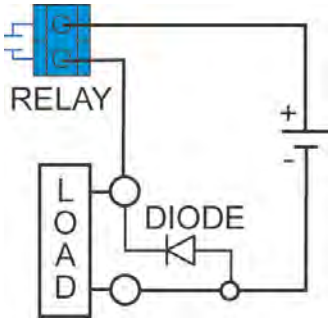

Catch Diode

- Always use stepper relays between the sensor and external loads. For DC circuits always use a catch diode such as 1N4148, shown on left.

Refer to the following circuits for RC network assembly and installation:

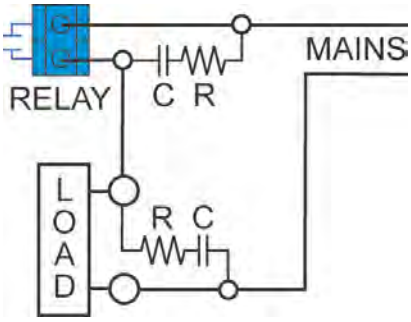

Choose R and C as follows:

- R: 0.5 to 1 Ohms for each volt across the contacts
- C: 0.5 to 1 µF for each amp through closed contacts

Notes:

1. Use capacitors rated for 250 VAC.
2. RC networks may affect load release time of solenoid loads. Check to confirm proper operation.
3. Install the RC network at the meters relay screw terminals. An RC network may also be installed across the load. Experiment for best results.

VOLTAGE OUTPUT – (DL10, DL14, DL24 & DL34 SERIES ONLY):

EchoPod® can be configured as a 0 to 5 output. A resistor will need to be added to the circuit to enable a voltage output (refer to the wiring diagram below).

- 0-5 VDC output
  - Add a 250 Ohm resistor
  - Actual output will be 0.8 to 5 VDC

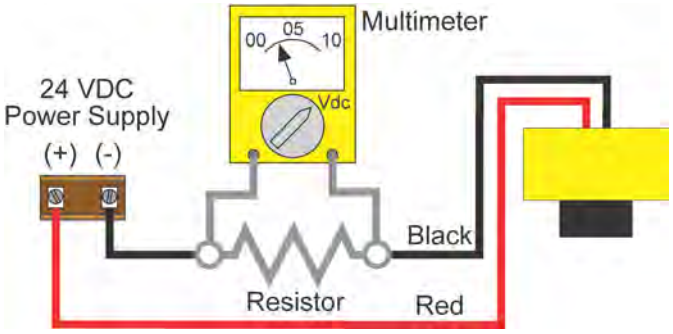

The EchoPod® should always be mounted perpendicular to the liquid surface and installed using the provided Viton® mounting gasket. Make sure that the fitting and transmitter threads are not damaged or worn. Always **hand-tighten** the transmitter within the fitting. Perform an installed leak test under normal process conditions prior to system start up. **Note: The preferred mounting fitting for the DL10, DL14, DL24, DS14 & DX10 series is the LM52-1400 (2" thread x 1" thread) reducer bushing.**

MOUNTING GUIDE

1. Do not mount at an angle.
2. Liquid should never enter the dead band.
3. Side Wall:
    a. Mount at least 2" from the side wall.
    b. For DL34 Series - mount at least 3" from the side wall.
4. Do not mount where obstacles will intrude into sensor's beam width.
    a. Beam Width: 2" (5cm) diameter [3" (7.6cm) for DL34].
5. Do not mount in a vacuum
6. Avoid mounting in the center of a dome top tank.
7. In cone bottom tank, position the sensor over the deepest part of the tank.

Do not install at angle relative to the liquid.	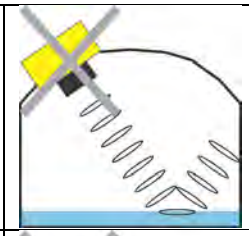
Do not install within 2" of tank sidewall. (3" for DL34 series)	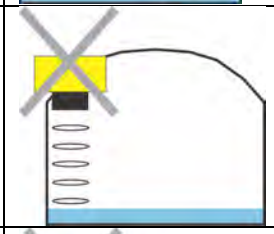
Do not install with objects in the beam.	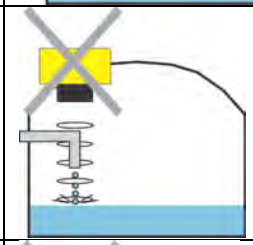
Do not install in applications with vacuum.	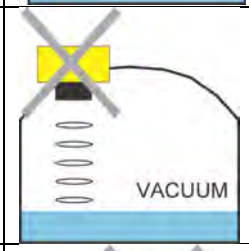
Do not install in the center of a dome top tank.	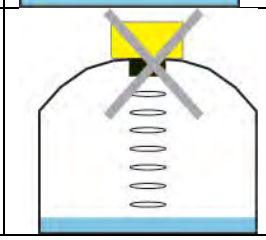

INSTALLATION IN EXISTING FITTINGS

If the existing fitting is larger than the threads of the EchoPod®, select a reducer bushing such as the LM52-1400 (2" thread x 1" thread) or LM52-2400 (3" thread x 2" thread).



LM52-1400



LM52-2400

METAL TANKS (DL10, DL14, DL24, DS14 & DX10 SERIES)

Flowline ultrasonic transmitters have been optimized for use in non-metallic fittings.

1. For best performance, avoid the use of metallic fittings.
    a. Use a plastic 2" x 1" reducer bushing, such as the LM52-1400 or a plastic 1" flange, such as the LM52-1850 for metallic tanks.
2. While installations directly into a 1" metal fitting are not recommended, acceptable results may be obtained if the 1" fitting is a half coupling in form and the outer diameter of the coupling is tightly wrapped in vinyl tape to dampen vibration.

FITTING SELECTION

Check the part number to determine the required fitting mount size and thread type. EchoPod® is commonly installed in tank adapters, flanges, brackets or standpipes. **Note:** Always include the gasket when installing the EchoPod®.

1. **Tank Adapter:** Select a tank adapter fitting, such as the LM52-1890 for the DL10, DL14, DL24, DS14 & DX10 series or the LM52-2890 for the DL34 series.
    a. For best results, select a 2” tank adapter and add a reducer bushing such as the LM52-1400, thread x thread, reducer bushing.
    b. Avoid tank adapter (thread x thread) styles and/or pipe stops forward of the installed transducer.
    c. Always mount the tank adapter so the majority of the fitting is outside the tank.
        i. **Note:** Never mount the tank adapter upside down or where the bulk of the material is inside the tank.

2” Tank Adapter Socket x Thread (LM52-2890)

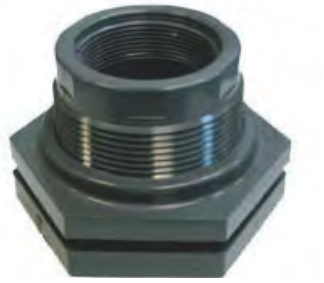

Tank Adapter v/ 2”x1” Reducer Bushing LM52-2890 w/ LM52-1800)

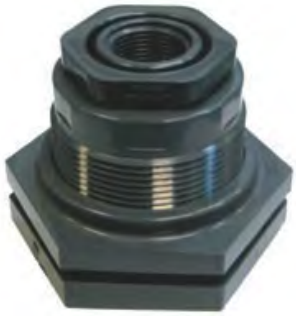

Tank Adapter Thread x Thread

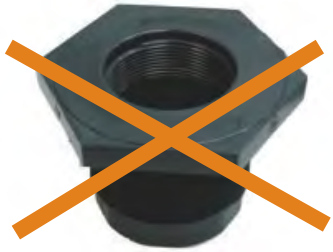

Do not use thread x thread

2. **Riser:** Installations with tall, narrow risers can impede the acoustic signal.
    a. **Core Out Concrete:** Applications where a concrete tank ceiling has been cored out can also be considered as a riser type application. In these applications follow a 2:1 ratio (Core Height to Inner Diameter) for the diameter of the core.
    b. **DL34 Series:** 2” (5 cm) diameter risers should be no taller than 4” (10cm). Larger diameter risers should be no taller than 12” (30.5 cm).
    c. **DL10, DL14, DL24, DS14 & DX10 Series:**

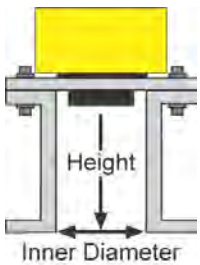

Riser Specifications	
Inner Diameter	**Maximum Height**
2” (5cm)	4” (10cm)
4” (10cm)	8” (20cm)
6” (15cm)	12” (30cm)

Note: Do not exceed the dimensions listed above.



Note: If attempting to raise the sensor above the top of the tank to allow for a higher fill capacity, avoid the use of tall and narrow risers. The example to the left exceeds the dimensions listed in the **Riser Specifications** chart. Use a larger tank adapter which takes into account the **Riser Specifications**.

3. **Flange (DL10, DL14, DL24, DS14 & DX10 Series):** If installing on a flange, select a flange with a thread that is above the plane of the flange, such as the LM52-1850.
    a. The DL34 series works well with flange installations.
    b. Avoid the use of blind flanges with tapped threads or flanges where the threads are even with the plane of the flange, such as the Banjo 1" Poly ANSI Flange (series AF100).
    c. Use a flange with a 2” thread and add a 2” to 1” reducer bushing to complete the installation.

2” Flange w/ thread out of plane (LM52-1850)



1” Flange w/ thread in plane



2” Flange w/ Reducer Bushing (w/LM52-1800)



Do not use thread in plane

4. **Side Mount Bracket:** For installations in open tanks and sumps, use the LM50 series side mount bracket.
    a. For the DL10, DL14, DL24, DS14 & DX10 series, order the LM50-1001-1, which includes a 2”x 1” reducer bushing.
    b. For the DL34 series, order the LM50-1001 side mount bracket.

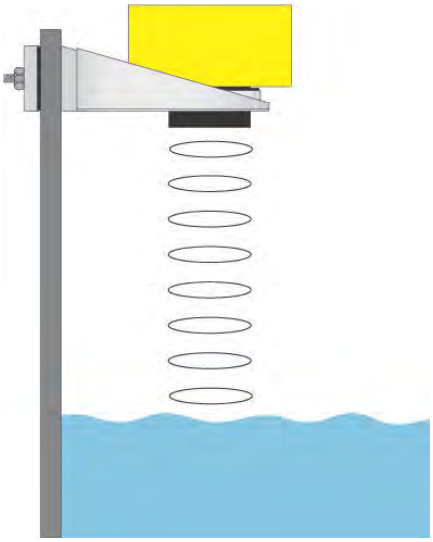

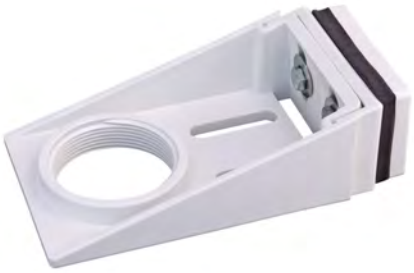

LM50-1001 Shown



LM50-1001-1 Shown

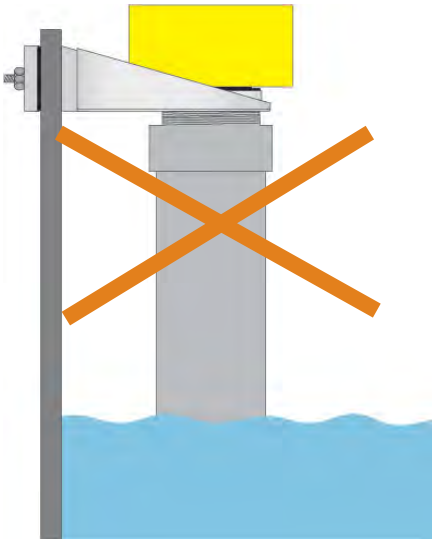

Note: The Side Mount Bracket (LM50 series) **is not designed** for use with stand pipes or as a method to secure stand pipes. There are too few threads to properly hold the sensor and the stand pipe.

5. **Stand Pipe:** A standpipe maybe used to dampen turbulence or separate surface foam from the point of measurement in the application.

    a. Pipe can be made of any material.
    b. Select a 3” ID pipe for the stand pipe.
        i. A 2” pipe (minimum pipe size) is usable with the DL10, DL14, DL24, DS14 & DX10 series. Minimum pipe size for DL34 series is 3” ID.
        ii. Pipe series larger than 3” can also be used.
    c. Use a coupling and reducer bushing to attach the EchoPod® to the pipe.
        i. Use a plastic reducing bushing such as LM52-1400 (2”T x 1”T) fitting or the LM52-1410 (2”S x 1”T) fitting.
        ii. For the DL34 series, use a plastic reducer bushing such as LM52-2400 (3”T x 2”T) fitting or the LM52-2410 (3”S x 2”T) fitting.
    d. The pipe length should run the measurement span and the bottom of the pipe should remain submerged at all times to prevent foam from entering the pipe.
    e. Cut a 45°notch at the bottom of the pipe and drill a 1/4”pressure equalization hole within the dead band of the sensor.
    f. The pumps should not drive liquid past the open end of the stand pipe which causes the liquid in the pipe to oscillate.

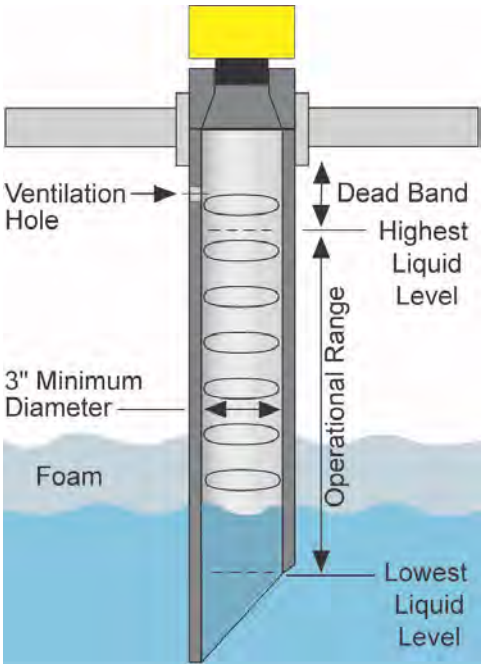

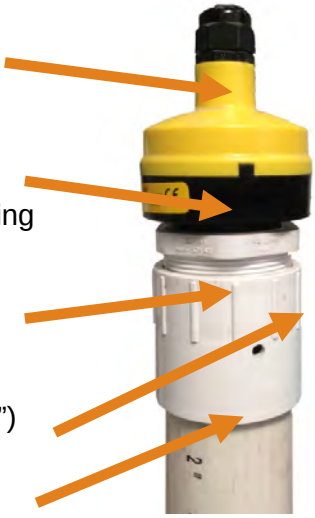

DL24 attached to a LM52-1400 (2”x1” reducer bushing) and 2” Coupling (S x T).



Avoid the use of a tee within the stand pipe. A tee can create false signals that will negatively effect the sensor’s performance.

The advanced feature settings are designed to help solve performance or operational issues for specific applications. Changing these setting will alter the factory default performance or operation of your sensor. Please read through this HELP file to assist you in making adjustments or if you are still unclear about a specific issue, please contact FLOWLINE applications engineering.

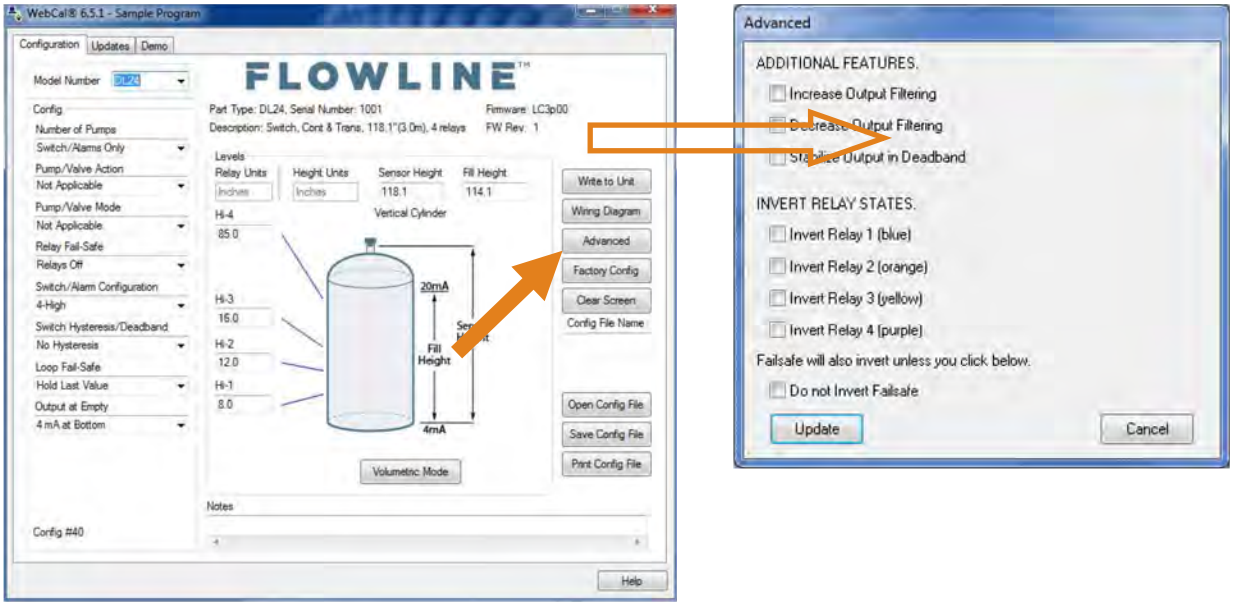

Note: When the Advanced Button is highlighted with a RED border, this indicates you have selected an advanced feature.

- **Increase Output Filtering**: Placing a check mark in the box will increase the filtering (averaging) of the analog output. Use this filter if the 4 to 20 mA output requires a smoother output for the application such as open channel flow measurement.
- **Decrease Output Filtering**: Placing a check mark in the box will eliminate all filtering (averaging) of the analog output which enables a pulse by pulse level reading. Use this filter to see changes in level after every echo pulse.

  Note: Never check increase output filtering and decrease output filtering at the same time.
- **Stabilize Output in Dead Band**: Placing a check mark in the box will activate a filter to hold the output at Full if the level enters the dead band of the EchoPod®. This filter requires the level to leave the dead band at a smooth and steady rate.
- **Invert Relay States**: Placing a check mark in any of the four boxes will reverse the state of that relay. For example, if relay 4 is a high alarm that energizes above 50.0" of liquid, checking the invert box will reverse it's state so the relay will energize when the level is below 50" of liquid. Inverting the relay will also invert the fail-safe of the relay. If the relay is fail-safe On, inverting the relay will make it fail-safe Off.
- **Fail-Safe will also invert unless you check below:** Placing a check mark in this box will not invert the fail-safe when a relay is inverted.

UPDATE AND DEMO TABS

WebCal® has two other page tabs which can be used to assist in the configuration of the EchoPod®. These page tabs are the Updates and Demo tabs.

- **Updates:** The Updates tab has two key features. The first is the ability to update the WebCal® software to its latest version. The second is the ability to update the EchoPod®'s firmware to its latest version.
- **Demo:** The Demo tab gives you the ability to test the configured EchoPod® sensor against a fixed target to confirm the switching points for the relays. **Note:** This feature is only a simulation. The relays are not physically opening and closing.

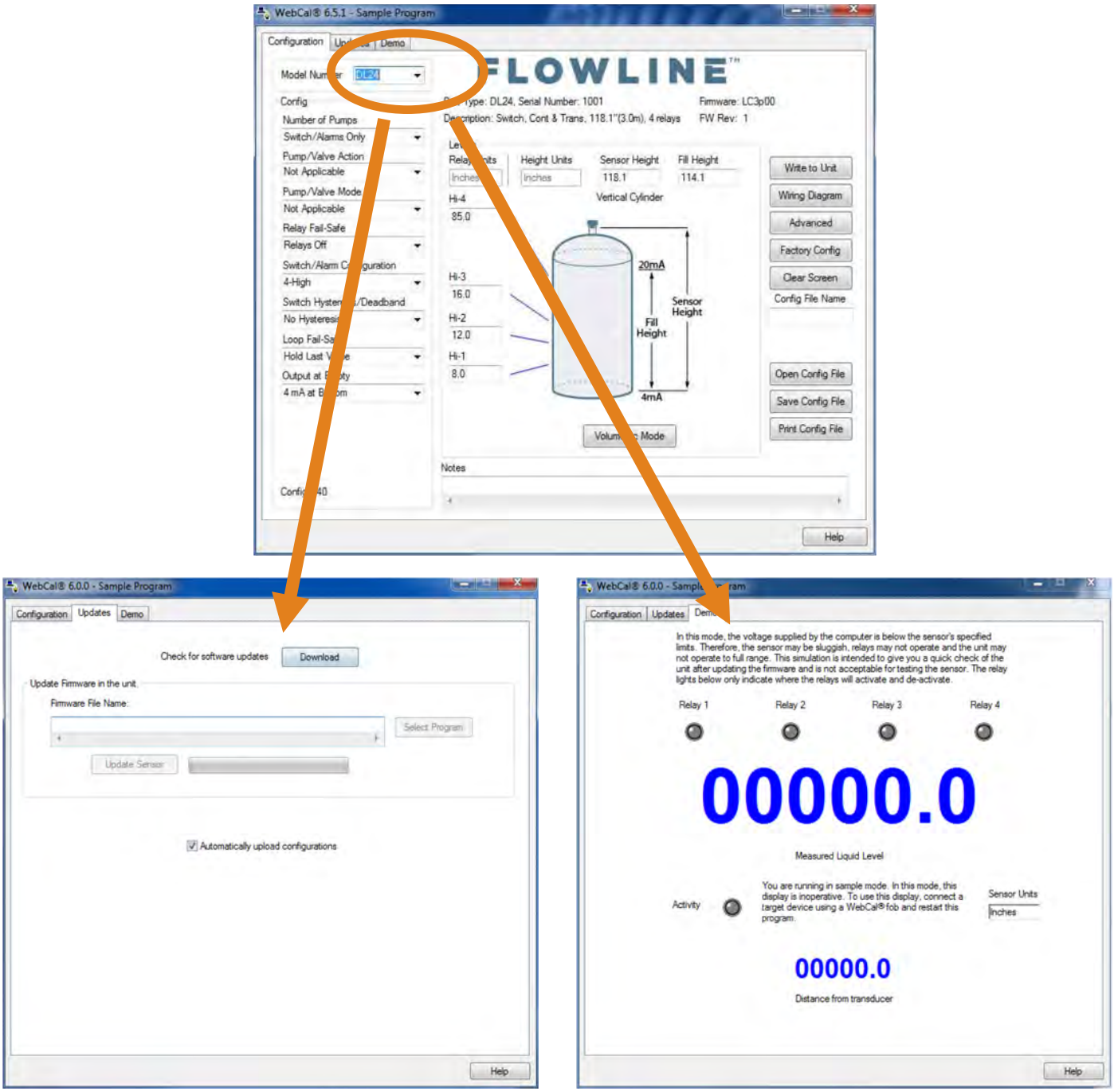

FACTORY DEFAULT

Pressing the Factory Config button in the Configuration menu will return the screen to the factory default setting of the attached EchoPod® model. In factory default, the EchoPod® 4-20 mA span will be placed at its maximum operational range.

- **DL10 & DL14 Series –** 4mA @ 4.1’ (1.25m) from the sensor and 20 mA @ 2” (5cm) from the sensor.
- **DX10 Series –** Min. Output (Empty) @ 4.1’ (1.25m) from the sensor and Max. Output (Full) @ 2” (5cm) from the sensor.
- **DL24 Series –** 4mA @ 8.2’ (2.5m) from the sensor and 20 mA @ 4” (10cm) from the sensor.
- **DL34 Series –** 4mA @ 18.0’ (5.5m) from the sensor and 20 mA @ 8” (20cm) from the sensor.

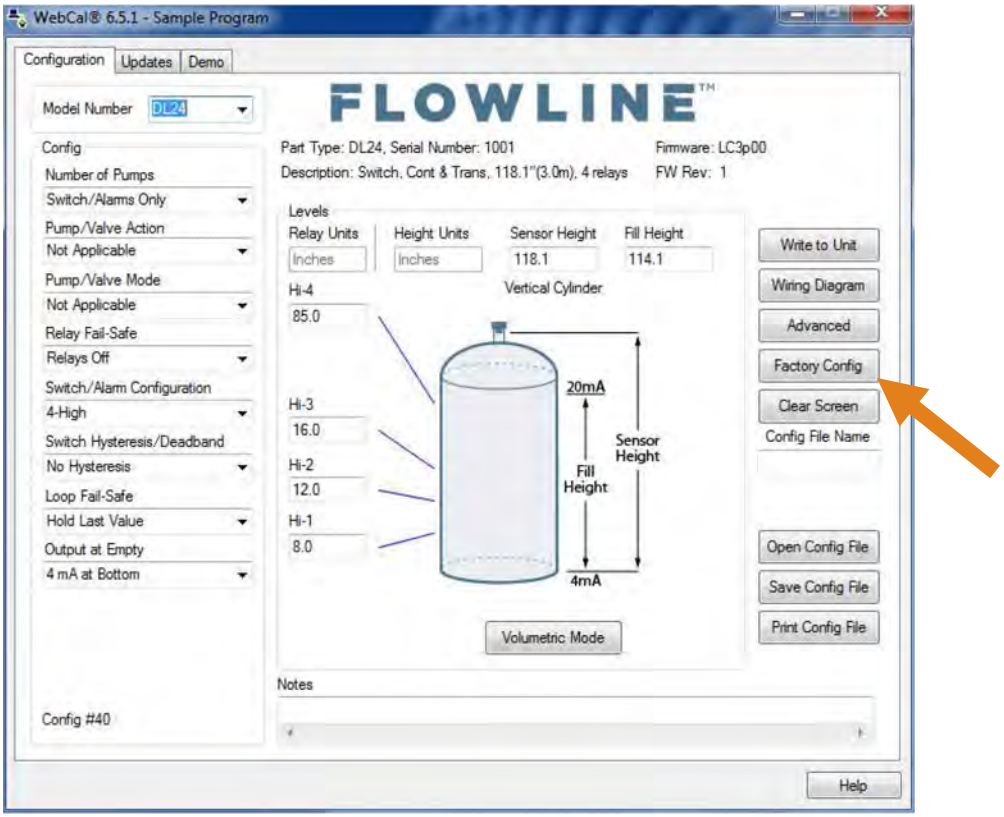

TESTING THE TRANSMITTER – DL10, DL14, DL24, DL34 SERIES ONLY

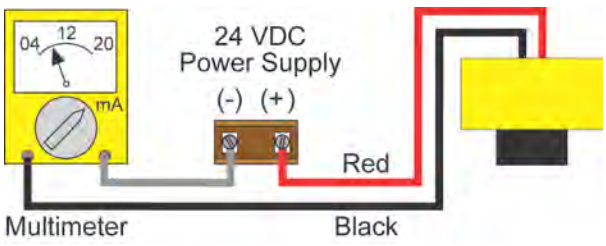

1. Connect a multimeter in series with the Black wire to read the current output.
2. Verify that the current increases (tank filling) and decreases (tank emptying) appropriately in the configured span.
3. If not, carefully observe and attempt to correlate any installation, level or application event to determine a root cause and troubleshooting direction.

TROUBLESHOOTING

PROBLEM	SOLUTION
Transmitter indicates a current of 0 mA.	Check the EchoPod® wiring for an open circuit. An open circuit is the most common cause of a 0 mA signal.
Transmitter jumps to a current of between 19 and 20 mA.	Check the EchoPod® installation. Bad installation fittings will cause false signals near the top of the tank, which typically translates to a signal between 19 and 20 mA. Also look for interference just below the transmitter. If the transmitter is installed in a metal fitting, switch to a plastic fitting.
Transmitter indicates a current over 23 mA.	Check the wiring for a short circuit. EchoPod® is current limited to 22 mA. Anything above 23 mA indicates a short circuit.
Transmitter always jumps to the LOST condition.	Check the dimensional configuration (**Sensor Height** and **Fill Height**) of EchoPod®. Make sure that the **Fill-H** setting corresponds to the full level of liquid (measured from the bottom up) and not the distance from the transmitter to the liquid (top down).
Transmitter output is opposite of the level of liquid.	Check the **Output at Empty** Setting in WebCal®.
No Unit Detected in WebCal®.	If WebCal® cannot detect EchoPod® when connected to the computer: • Check that the Fob is connected to the USB® port. • Check that all four wires (Red, Black, White and Green) are securely attached to the Fob. • Check Device Manager and confirm that both drivers (WebCal® Configuration & EchoFob) are present.
Internet error. The server name or address could not be resolved.	This is a warning indicating that the computer configuring EchoPod® is not connected to the Internet. Click **OK** to continue. Flowline recommends being connecting to the Internet during configuration. But, not being connected to the Internet will not prevent EchoPod® from being configured.
Cannot access some of the configuration features in WebCal®.	As choices are made in Configuration, WebCal® will begin to eliminate functions that are not applicable to a configuration. To reset Configuration or get access to all the features, click on the **Clear Screen** button.
Relay closes, but does not open again.	An inductive kick may be holding the relay closed. If switching 24 VDC, make sure a diode has been installed to act as a snubber (see Step Nine). **Note:** EchoPod® uses latching relays. When power is removed to the sensor, the relays will remain in their last state. Ex: If the relay is energized, when power is removed, the relay will remain in an energized state.
Relay chatters on and off repeatedly.	Most likely the turbulence in the tank is causing the chatter. Increase the Hysteresis setting in WebCal® to eliminate the chatter.

WARRANTY

Flowline warrants to the original purchaser of its products that such products will be free from defects in material and workmanship under normal use and service in accordance with instructions furnished by Flowline for a period of two years from the date of manufacture of such products. Flowline's obligation under this warranty is solely and exclusively limited to the repair or replacement, at Flowline's option, of the products or components, which Flowline's examination determines to its satisfaction to be defective in material or workmanship within the warranty period. Flowline must be notified pursuant to the instructions below of any claim under this warranty within thirty (30) days of any claimed lack of conformity of the product. Any product repaired under this warranty will be warranted only for the remainder of the original warranty period. Any product provided as a replacement under this warranty will be warranted for the full two years from the date of manufacture.

RETURNS

Products cannot be returned to Flowline without Flowline's prior authorization. To return a product that is thought to be defective, go to flowline.com, and submit a customer return (MRA) request form and follow the instructions therein. All warranty and non-warranty product returns to Flowline must be shipped prepaid and insured. Flowline will not be responsible for any products lost or damaged in shipment.

LIMITATIONS

This warranty does not apply to products which: 1) are beyond the warranty period or are products for which the original purchaser does not follow the warranty procedures outlined above; 2) have been subjected to electrical, mechanical or chemical damage due to improper, accidental or negligent use; 3) have been modified or altered; 4) anyone other than service personnel authorized by Flowline have attempted to repair; 5) have been involved in accidents or natural disasters; or 6) are damaged during return shipment to Flowline. Flowline reserves the right to unilaterally waive this warranty and dispose of any product returned to Flowline where: 1) there is evidence of a potentially hazardous material present with the product; or 2) the product has remained unclaimed at Flowline for more than 30 days after Flowline has dutifully requested disposition. This warranty contains the sole express warranty made by Flowline in connection with its products. ALL IMPLIED WARRANTIES, INCLUDING WITHOUT LIMITATION, THE WARRANTIES OF MERCHANTABILITY AND FITNESS FOR A PARTICULAR PURPOSE, ARE EXPRESSLY DISCLAIMED. The remedies of repair or replacement as stated above are the exclusive remedies for the breach of this warranty. IN NO EVENT SHALL FLOWLINE BE LIABLE FOR ANY INCIDENTAL OR CONSEQUENTIAL DAMAGES OF ANY KIND INCLUDING PERSONAL OR REAL PROPERTY OR FOR INJURY TO ANY PERSON. THIS WARRANTY CONSTITUTES THE FINAL, COMPLETE AND EXCLUSIVE STATEMENT OF WARRANTY TERMS AND NO PERSON IS AUTHORIZED TO MAKE ANY OTHER WARRANTIES OR REPRESENTATIONS ON BEHALF OF FLOWLINE. This warranty will be interpreted pursuant to the laws of the State of California. If any portion of this warranty is held to be invalid or unenforceable for any reason, such finding will not invalidate any other provision of this warranty.

For complete product documentation, video training, and technical support, go to flowline.com.
For phone support, call 562-598-3015 from 8am to 5pm PST, Mon - Fri.
(Please make sure you have the Part and Serial number available.)