Switch-Tek™ LV42

Large Sump Float Liquid Level Switch

FLOWLINE™ LEVEL BEST

Application

The general purpose sump float level switch provides reliable liquid level detection and is designed for the automation of pumps, specifically filling and draining of tanks, wells and reservoirs. The LV42 body is free of any irregularities, making it ideal for use in sewage water applications. The polypropylene body consists of a double airtight chamber with high-pressure melted polypropylene re-injection sealing to ensure a perfect seal against infiltration.



LV42-7201

Features

- Mercury-free self counter-weighted float switch
- Submersible polypropylene body and PVC cable for corrosive liquids
- 10 (3) A @ 250 VAC dry contact selectable NO or NC state via wiring selection
- Compatible with counter weights and cable hangers for simple installation

Key Benefits

- Ideal for use in sewage water applications
- Float can wire directly to PLC/ SCADA or controller
- Counter-weighted float minimizes the effects of relay chatter
- Double-airtight chamber helps protect from debris infiltration

Compatible Products



LC4X

SWITCH-PRO™

Remote Level Controller

The general purpose remote level controller is offered in three configurations for pump and valve control. The LC40 accepts one level sensor input and provides one 10A relay. The LC41 accepts two level sensor inputs and provides one latching 10A relay for automatic fill or empty control. The LC42 accepts three level sensor inputs with one latching 10A relay output for automatic fill or empty control, and a second non-latching 10A relay for high or low level alarm. For field mount installation, add a single or dual indicator NEMA box.



LC1X

SWITCH-PRO™

Compact Level Controller

The general purpose compact level controller is offered in two configurations for pump and valve control. The LC10 accepts one level sensor input and provides one 16A relay for high level control or low level control. The LC11 accepts two level sensor inputs and provides one latching 16A relay for automatic fill or empty control. The optional flash alarm brings attention to alarm conditions. Package this level controller with our liquid level switch sensors and fittings.

Switch-Tek™ LV42

Large Sump Float Liquid Level Switch

FLOWLINE™ LEVEL BEST

Specifications

Orientation:	Vertical
Service:	Compatible liquids, slurries
Contact type:	SPST (NO/NC)
Contact rating:	10 (3) A @ 250 VAC
Process temp.:	F: -4° to 122°
	C: -20° to 50°
Pressure range:	29 psi (2 bar)
Sensor rating:	IP68
Sensor material:	Polypropylene (PP)
Wire jacket mat.:	PVC
Weight (housing):	2.4 lb (1.1 kg)
Weight (cdable):	0.77 lb (21.27g) per foot
Classification:	General purpose
Compliance:	CE

Dimensions

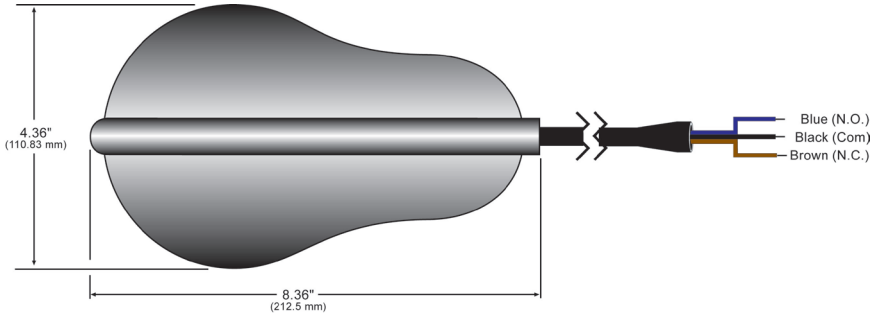

Accessories

For enhanced flexibility and performance, use these recommended accessories.



P/N	DESCRIPTION
LV49-7000	Counter Weight



LM50-5000	M12 female connector only with 4 terminals

Ordering

LV42 - 7 ☐☐ **1**

CABLE LENGTH

20	20’ of cable
50	50’ of cable

NOTES

1) To special order a 25’ (7.6m) or 50’ (15.2 m) level sensor cable, place the cable length at the end of the part number (ie: LV20-1201-25’). For PP, add $20 for 25’ (7.6m) or $40 for 50’ (15.2m) to the price. For PVDF, add $30 for 25’ (7.6m) or $60 for 50’ (15.2m) to the price.

2) To special order a 25’ (7.6m) level sensor cable, place the cable length at the end of the part number (ie: LH25-1201-25’). For PP, add $20 for 25’ (7.6m) to the price. For PVDF, add $85 for 25’ (7.6m) to the price.

© 2026 Flowline | 10500 Humbolt Street, Los Alamitos, CA 90720 USA **p** 562.598.3015 **f** 562.431.8507 **w** flowline.com