Switch-Tek™ LP50 Non-Intrusive Capacitance Level Switch

Application



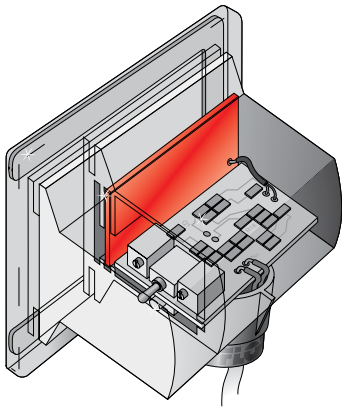

The general purpose non-intrusive capacitance level switch provides reliable liquid level detection of water based conductive liquids with non-coating and/or scaling characteristics with a 1A relay output. Media examples include hydrochloric, sulfuric acid and water. The liquid level sensor is bracket mounted on the exterior wall of non-metallic tanks and applied as a high level alarm or low level alarm.

Features

- Non-intrusive level detection through plastic or fiberglass walls
- Installed with polyethylene, polypropylene or PVDF adhesive 3M mounting brackets
- Rugged PSO enclosure rated NEMA 4X with conduit connector
- 60VA relay selectable NO or NC via power supply wiring polarity

Key Benefits

- Ideal for high purity conductive liquids
- Three different bracket materials makes attachment to tank easy
- Great for non-metallic or FRP tanks up to 1” thick
- Use as a high or low level switch

Tech Tip

With two calibration adjustments, the non-intrusive switch set point will be customized to your specific tank wall thickness and applicaiton media.



Compatible Products

Switch-Pro™
Remote Level Controller



LC4X

Application

Available in general purpose classification, the level controller is offered in three configurations for pump and valve control. The LC40 accepts one level sensor input and provides one 10A relay. The LC41 accepts two level sensor inputs and provides one latching 10A relay for automatic fill or empty control. The LC42 accepts three level sensor inputs with one latching 10A relay output for automatic fill or empty control, and a second non-latching 10A relay for high level alarm or low level alarm. For field mount installation, add a single or dual indicator NEMA box.

Switch-Tek™ LP50 Non-Intrusive Capacitance Level Switch

Specifications

Accuracy:	± 1mm in water
Repeatability:	± 0.5mm in water
Dielectric range:	> 10 constants
Conduct. range:	> 100 µ
Supply voltage:	12-36 VDC
Consumption:	25 mA maximum
Contact type:	(1) SPST relay
Contact rating:	60 VA, 1A maximum
Contact output:	Selectable NO / NC
Process temp.:	F: -40° to 176°
	C: -40° to 80°
Enclosure rating:	NEMA 4X (IP65)
Enclosure mat.:	PSO
Cable jack. mat.:	Polypropylene
Cable type:	4-conductor, shielded
	#22 AWG
Cable length:	10’ (3m)
Conduit entrance:	1/2” NPT
Tank mat. comp.:	Non-metallic
Tank mounting:	Bracket w/3M adhesive,
	plastic thermal weld
Tank wall thickness:	< 1” (25mm)
Bracket material:	-6005: Polyethylene
	-1005: Polypropylene
	-5005: PVDF
Classification:	General purpose
Compliance:	CE

Dimensions

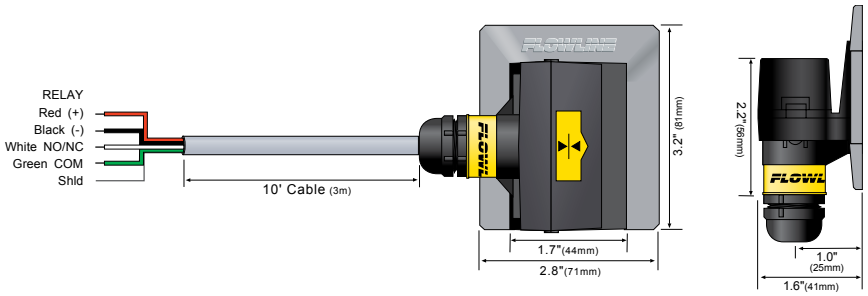

Accessories

For enhanced flexibility and performance, use the below recommended power supply.



P/N	Description
Non-Intrusive Capacitance Mounting Bracket	
LP95-1001	Mounting Bracket, Polypropylene
LP95-6001	Mounting Bracket, Polyethylene
LP95-5001	Mounting Bracket, PVDF



Single & Two Controller NEMA Box	
LM92-1202	Single NEMA Box, Windowed, 35mm Rail, PC
LM92-2202	Double NEMA Box, Windowed, 35mm Rail, PC

Ordering

LP50-□005

Bracket material (1) (2)

- ***1*** *PP*
- ***5*** *PVDF*
- ***6*** *PE*

Notes

1) Select the bracket material that matches the tank wall. Each level sensor comes with one bracket. Additional brackets may be ordered separately.
2) To special order a 25’ (7.6m) or 50’ (15.2 m) level sensor cable, place the cable length at the end of the part number (ie: LP50-6005-25’). Contact factory for pricing special lengths.