Switch-Tek®

Mini-Float Liquid Level Switch

FLOWLINE™ LEVEL BEST

LV20 & LH25 Series Manual

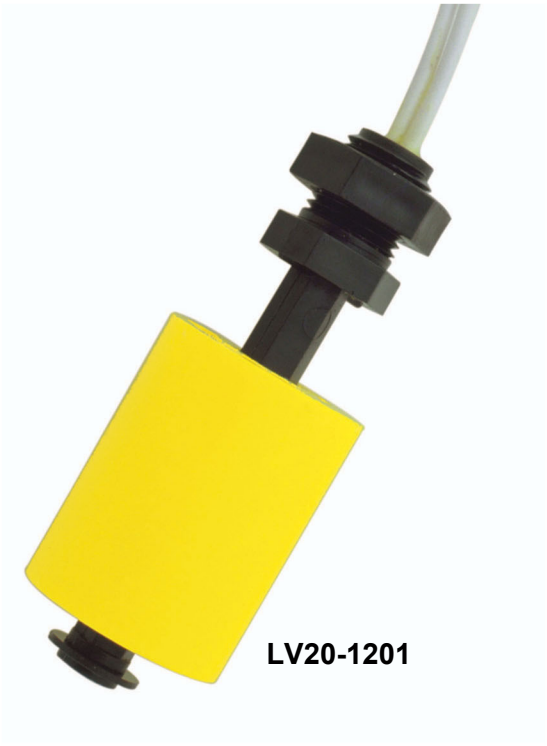

LV20-1201



LV20-5201

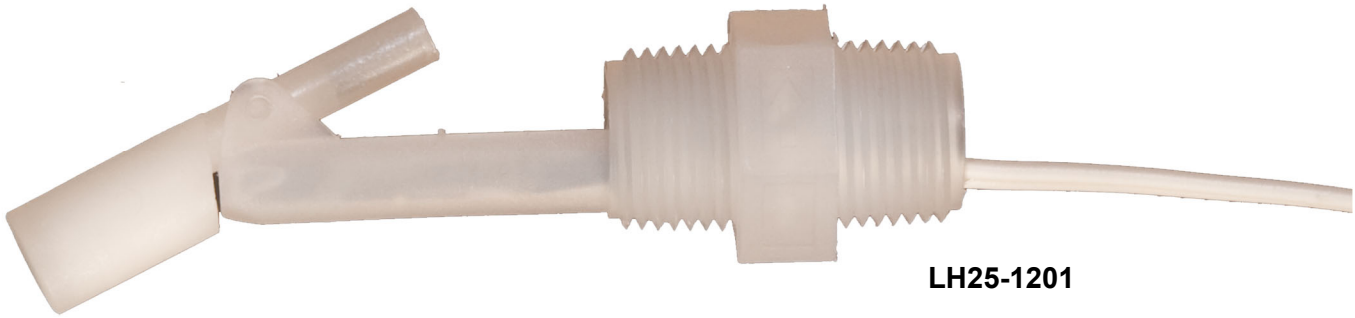

LH25-1201

ABOUT SWITCH-TEK™ MINI-FLOAT LEVEL SWITCH

The Mini-Float level switch consists of a float, magnet, reed switch and body/stem with mounting threads. When the probe is dry, the float rests on the bottom of the stem such that the magnet does not influence the reed switch. As the probe becomes immersed in liquid, the float becomes buoyant and the magnet elevates causing the reed switch to change state.

TABLE OF CONTENTS

Specifications: 3
Dimensions: 4
Safety Precautions: 5
Installation: 6
    General Information: 6
    Orientation: 7
Electrical: 8
    Voltage: 8
    Cable Length: 8
    Signal Outputs: 8
    Vertical Mini-Float Level Switch: 8
    Horizontal Mini-Float Level Switch: 9
    Contact Protection: 9
Wiring: 10
    Wiring to a Flowline Controller: 10
Maintenance: 11
    General: 11
    Cleaning Procedure: 11
    Testing the installation: 11
Warranty: 12

Specifications / Dimensions

Orientation:	LV20: ±20° from vertical LH25: ±20° from horizontal
Accuracy:	±5mm in water
Repeatability:	±2mm in water
Specific Gravity:	LV20: 0.8 minimum LH25: 0.6 minimum
Contact Type:	(1) SPST reed
Contact Rating:	LV20: 120VAC/VDC @ 50 VA LH25: 120VAC/VDC @ 30 VA
Contact Output:	Selectable NO/NC
Temperature Range:	LV20: F: -40° to 176° C: -40° to 80° LH25: F: -40° to 221° C: -40° to 105°
Pressure Range:	LV20: 10 psi (0.7bar) LH25: 100 psi (6.9 bar)
Sensor Rating:	NEMA 6 / IP68
Sensor Material:	LV20-12_1: PP LV20-52_1: PVDF LH25-1201: PP LH25-5201: PVDF
Wire Jacket Mat'l:	LV20-12_1: PVC LV20-52_1: TFE LH25-1201: Polymeric LH25-5201: TFE
Wire Type:	2-conductor, 22-gauge
Wire Length:	2' (61cm)
Process Mount:	LV20: 1/8" NPT (R) LH25: ½" NPT
Classification:	General Purpose
Compliance:	CE

Switch Rating

Reed Switch Rating		Maximum Resistive Load	
VA	Volts	Amps AC	Amps DC
50	0-50	0.5	0.5
	120	0.4	0.4
	240	0.2	0.2
30	0-50	0.3	0.28
	120	0.28	0.07
	240	0.14	N/A

Components

Part Number	Body Material	Cable Material	Thread
LV20-1201	PP	PVC	1/8" NPT
LV20-1251	PP	PVC	1/8" R
LV20-5201	PVDF	TFE	1/8" NPT
LV20-5251	PVDF	TFE	1/8" R
LH25-1201	PP	Polymeric	½" NPT
LH25-5201	PVDF	TFE	½" NPT

DIMENSIONS

LV20-1201, LV20-1251, LV20-5201, LV20-5251

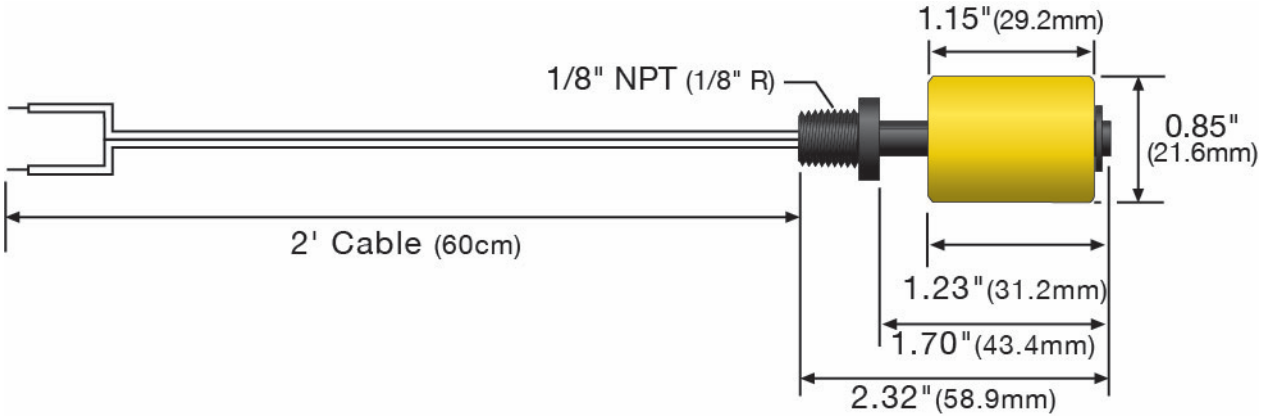

LH25-1201, LH25-5201

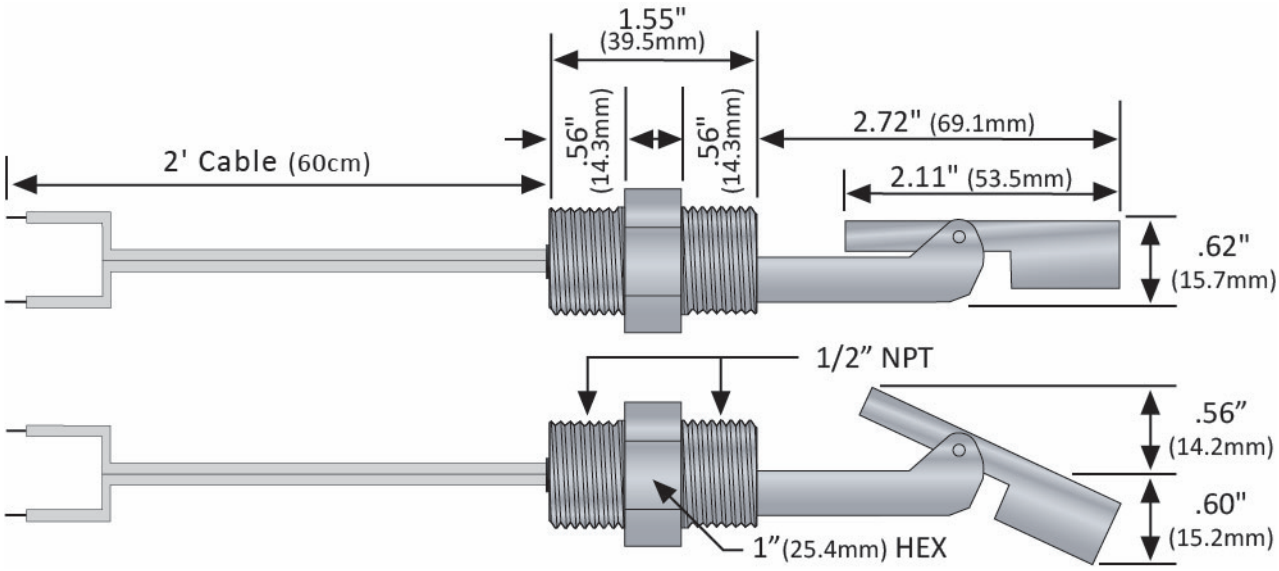

- **About Manual:** PLEASE READ THE ENTIRE MANUAL PRIOR TO INSTALLING OR USING THIS PRODUCT. This manual includes information on the mini-float level switch, model LV10-_2_1 and LH25-_201. Please refer to the part number located on the sensor label to verify the exact model which you have purchased.

- **User's Responsibility for Safety:** Flowline manufactures a wide range of liquid level switches and technologies. While each of the these switches are designed to operate in a wide variety of applications, it is the user's responsibility to select a switch model that is appropriate for the application, install it properly, perform tests of the installed system, and maintain all components. The failure to do so could result in property damage or serious injury.

- **Proper Installation and Handling:** Because this is an electrically operated device, only properly trained staff should install and/or repair this product. Use a proper sealant with all installations. Never over tighten the sensor within the fitting, beyond a maximum of 80 inch-pounds torque. Always check for leaks prior to system start-up.

- **Material Compatibility:** The LV20 and LH25 series mini-float level switches are available in two wetted material versions. The LV20-12_1 mini-float vertical switch is made of Polypropylene (PP) with a Polyvinylchloride (PVC) cable and the LH25-1201 mini-float horizontal switch is made of Polypropylene (PP) with a Polymeric cable. The LV20-52_1 mini-float vertical switch and the LH25-5201 mini-float horizontal switch are made of Polyvinylidene Fluoride (PVDF) with a Tetrafluoroethylene (TFE) cable. Make sure that the switch application is compatible with the liquids. To determine the chemical compatibility between the sensor and its application liquids, refer to the Compass Corrosion Guide, available from Compass Publications.

- **Temperature and Pressure:** The LV20 series switch is designed for use in application temperatures up to 80°C, and for use at pressures up to 10 psi (0.7bar). The LH25 series switch is designed for use in application temperatures up to 105°C, and for use at pressures up to 100 psi (6.9bar).

- **Wiring and Electrical:** The supply voltage used for the LV20 switch should never exceed 240 volts AC @ 50 VA for the LV20-_2_1. For the LH25 series, the supply voltage should never exceed 240 Volts AC @ 30VA. Electrical wiring of the switch should be performed in accordance with all applicable national, state, and local electrical codes.

- **Flammable, Explosive and Hazardous Applications:** The LV20 and LH25 series mini-float level switches should not be used within flammable or explosive applications unless properly connected to an approved control device. In hazardous applications, use redundant measurement and control points, each having a different sensing technology. Refer to the National Electrical Code (NEC) for all applicable installation requirements in hazardous locations.

Warning

Avoid installing the mini-float level switches in magnetized metal tanks. Doing so will activate the internal reed switch.

GENERAL INFORMATION

1. Switches should be installed rigidly so the floats are free to move as the liquid level changes.
2. Switches should be mounted in a tank area free of severe turbulence or protected from such turbulence by appropriate and adequate slosh shields or barriers such as bypass chamber or stand pipes..
3. Vertical switch stems should be vertical for best results, but satisfactory operation is possible in most liquids with the stem ≤ 20° angle from vertical.
4. Horizontal mount switch stems must be mounted with the arrow vertically either up or down depending on switch operation.
5. Care should be taken that switches are always operated within electrical ratings.
6. The switch state (open or closed) for vertical switches can be changed from normally open when dry to normally closed when dry or vice versa by removing the float and reversing it on the stem (see Step Five).
7. The switch state (open or closed) for horizontal switches can be changed from normally open when dry to normally closed when dry or vice versa by rotating the float 180° across its axis (see Step five).

Top Wall Installation (LV20 series only): FLOWLINE's LV20 mini-float switch may be installed through the top wall of a tank. Because the thread of the sensor is very small (1/8"), finding standard fittings may be difficult. In lieu of standard fittings, one suggestion is to use a larger pipe, such as ½". Place a cap or plug on the end of the pipe and tap a 1/8" thread into the end. Secure the other end of the pipe to the top of the tank or to a clamp. For pipes longer than 2', be sure to extend the cable (splice) so that the connection is not exposed to the liquid.

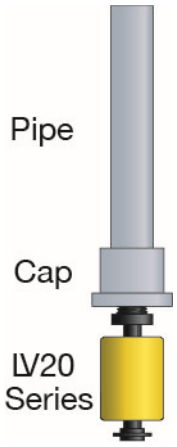

Through Wall Installation (LH25 series only): FLOWLINE's LH25 mini-float switch may be installed through the side wall of a tank. The LH25 series has dual male 1/2" NPT threads for installation from the outside of the tank in or the inside of the tank out. If the LH25-_201 is installed in the Outside-In method, then the outer threads may be used for connection to conduit.

Inside-Out Installation

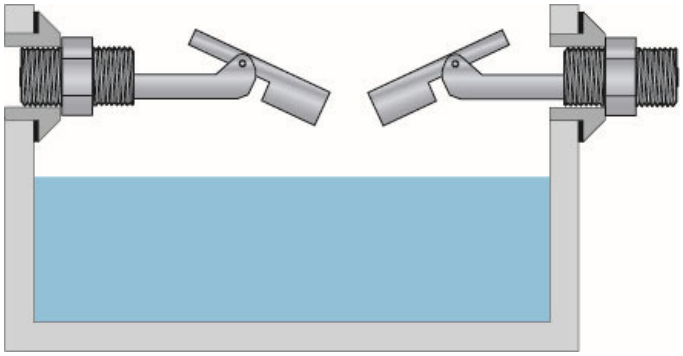

Outside-In Installation

ORIENTATION

Mounting orientation must be kept vertical for the LV20 series and horizontal for the LH25 series. For proper orientation, make sure the LV20 series is not off-axis more than 20°. For the LH25 series, make sure the body of the float is horizontal and not off-axis by more than 20°. In addition, make sure that the float swing is no more that 20° off-axis.

LV20 Series Off-Axis

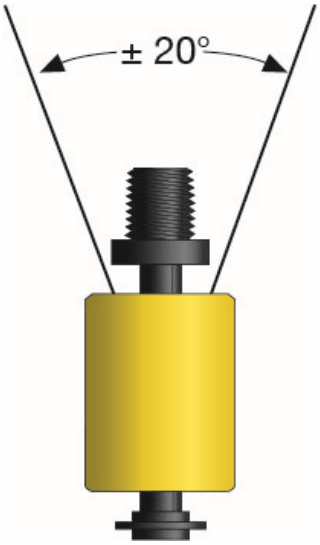

LH25 Series Off-Axis

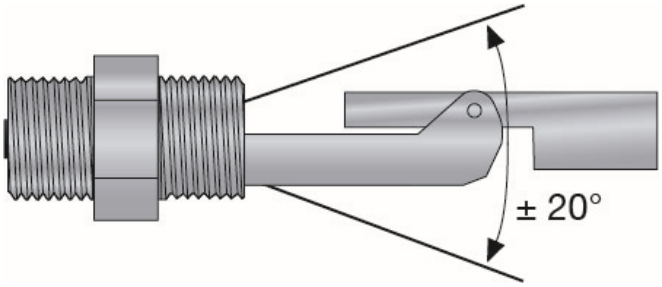

LH25 Series Float-Drops

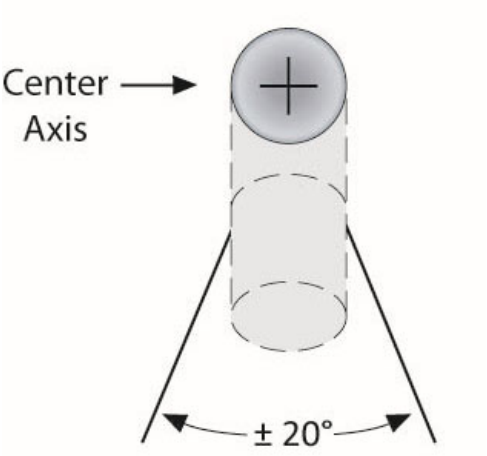

LH25 Series Float-Rises

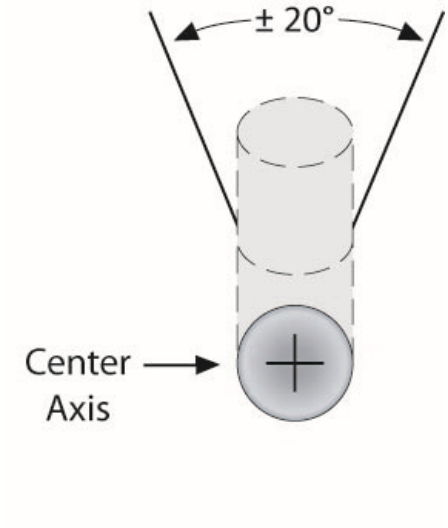

VOLTAGE

The input voltage to the LV20 / LH25 mini-float switch should never exceed the maximum voltage rating. FLOWLINE controllers have a built-in 13.5 VDC power supply which provides power to all of FLOWLINE's level switches. Alternate controllers and power supplies may also be used with the LV20 / LH25 mini-float switch.

CABLE LENGTH

Determine the length of cable required between the LV20 series mini-float switch and its point of termination. Allow enough slack to ensure the easy installation, removal and/or maintenance of the sensor. The cable length may be extended up to a maximum of 500 feet, using a well insulated, shielded wire.

SIGNAL OUTPUTS (NORMALLY OPEN VS NORMALLY CLOSED)

The LV20 series mini-float switch ships from the factory in the Normally Open (NO) configuration. The normal state is when the float is resting on the bottom of the stem. An orientation mark will appear on the top of the float when it is in the NO configuration. To switch the LV20 series from NO to NC configuration, follow the steps below.

1. Remove the C-clip from the stem.
2. Remove the float and invert the float 180° whereby the orientation mark is now on the bottom.
3. Return the float to the stem.
4. Replace the C-clip.

VERTICAL MINI-FLOAT LEVEL SWITCH (LV20 SERIES ONLY):

Normally Open Operation:	**Normally Closed Operation**:
Orientation mark on the top of the float. In the dry state, the float rests on the bottom of the stem and the circuit is open. 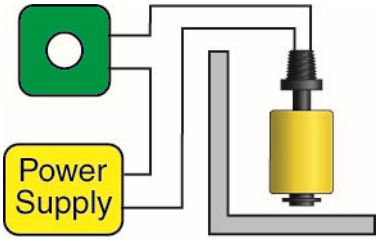	Orientation mark on the bottom of the float. In the dry state, the float rests on the bottom of the stem and the circuit is closed. 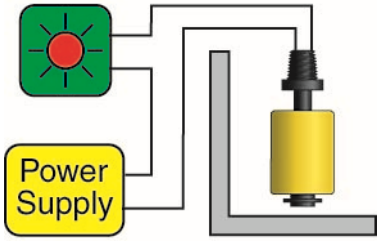
As the switch becomes wet, the float becomes buoyant and circuit closes. 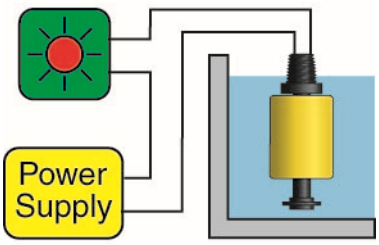	As the switch becomes wet, the float becomes buoyant and circuit opens. 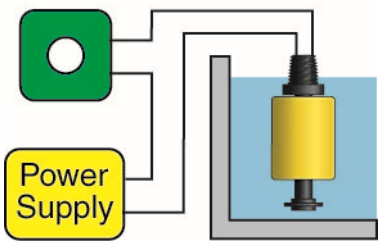

HORIZONTAL MINI-FLOAT LEVEL SWITCH (LH25 SERIES ONLY):

Normally Open Operation:	Normally Closed Operation:
Position the switch such that the float swings down when the switch is dry. In the dry state, the float rests in the lowest position and the circuit is open. 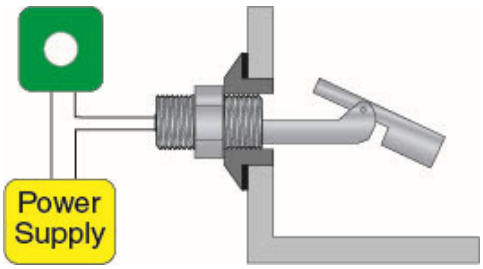	Position the switch such that the float rests on top of the switch when the switch is dry. In the dry state, the float rests on the switch and the circuit is closed. 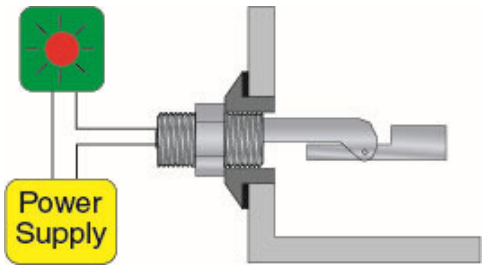
As the switch becomes wet, the float becomes buoyant and circuit closes. 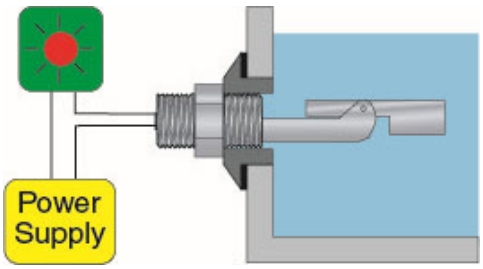	As the switch becomes wet, the float becomes buoyant and circuit opens. 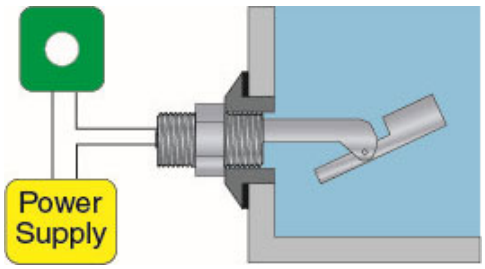

CONTACT PROTECTION (REED SWITCH):

When current is interrupted, the inductance of the load generates a high frequency voltage that appears across the switch contacts. If the voltage is large enough, it can cause arcing. Arcing can cause the contacts to weld together resulting in unreliable switch performance. It is essential to protect the circuit by suppressing the voltage to prevent arcing.

To accomplish this, use a diode for DC circuits and a resistor-capacitor network for AC circuits.

DC Contact Protection:

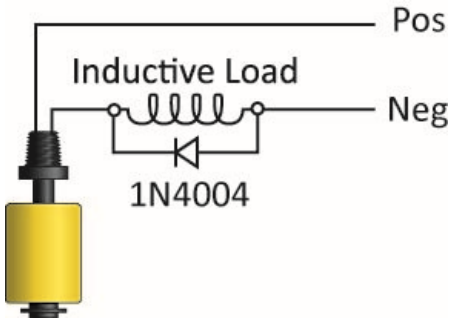

AC Contact Protection:

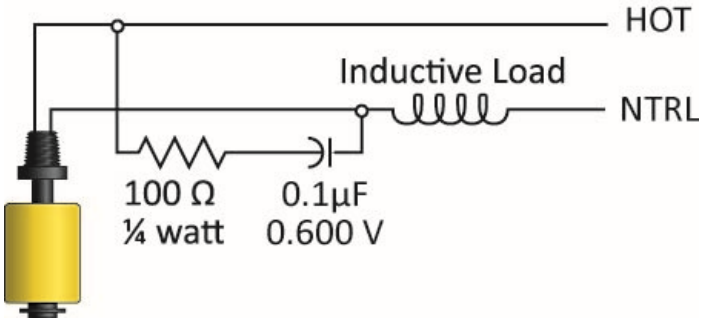

WIRING TO A FLOWLINE CONTROLLER

LC40 Series Controller (LC42-1001 Shown)

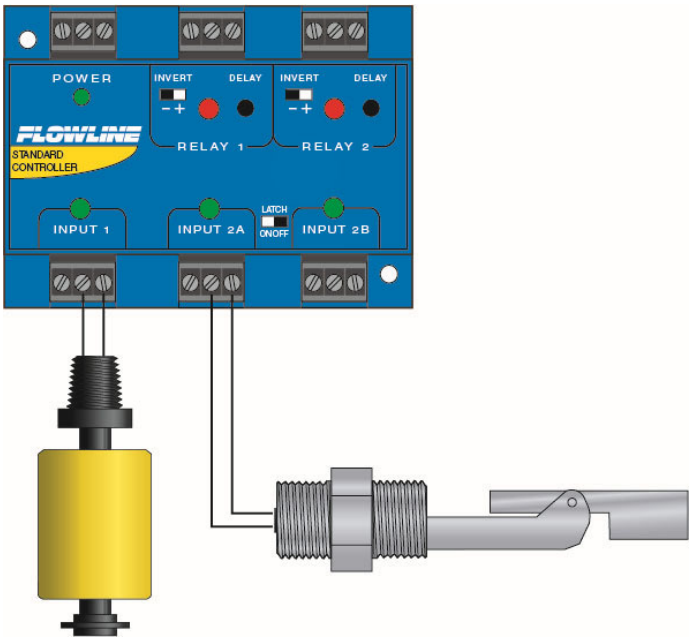

LC10/LC11 Series Controller (LC11-1001 Shown)

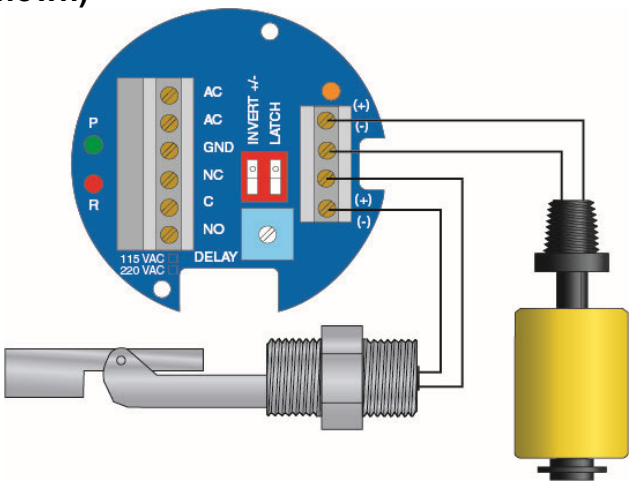

NOTE: *When using a latching relay, the polarity of both switches must be equivalent. i.e. both switches are wither wired Normally Open or Normally Closed.*

NOTE: *Polarity is selected by the orientation of the float.*

GENERAL

The switch may need to be cleaned periodically to prevent jamming or sticking. The mini-float has no scheduled maintenance requirement, except to clean off any deposits or scaling from the switch as necessary. It is the responsibility of the user to determine the appropriate maintenance schedule, based on the specific characteristics of the application liquid.

CLEANING PROCEDURE

1. **Power:** Make sure that all power to the switch, controller and/or power supply is completely disconnected.
2. **Switch removal:** If necessary, make sure that the tank is drained well below the switch prior to removal. Carefully, remove the sensor from the installation. Remove the outer screen by pushing on the screen and turning it slightly to disconnect it from the buoyancy net connector so that the float is exposed.
3. **Cleaning the switch:** using a soft bristle brush and mild detergent, carefully wash the switch. Do not use harsh abrasives such as steel wool or sandpaper that might damage the surface of the sensor. Do not use incompatible solvents that may damage the sensor's PP or PVDF plastic body. Take particular care to remove any scaling from the float body and make sure that it moves freely.
4. **Sensor installation:** Follow the appropriate steps of installation as outlined in the Installation section of this manual.

TESTING THE INSTALLATION

1. **Power:** Turn on power to the controller and/or power supply.
2. **Immersing the switch:** Immerse the mini-float in its application liquid, by filling the tank up to the switch during preliminary testing is to hold a cup filled application liquid up to the switch's tip.
3. **Test:** With the switch being fluctuated between wet and dry states, the switch indicator light in the controller should turn on and off. If the controller doesn't have an input indicator,
    a. Use a voltmeter with a power supply in series to measure an open or closed circuit.
    b. Use an ohmmeter in series to measure an open or closed circuit.
4. **Point of actuation:** Observe the point at which the rising or falling fluid level causes the switch to change state and adjust the installation of the switch as necessary.

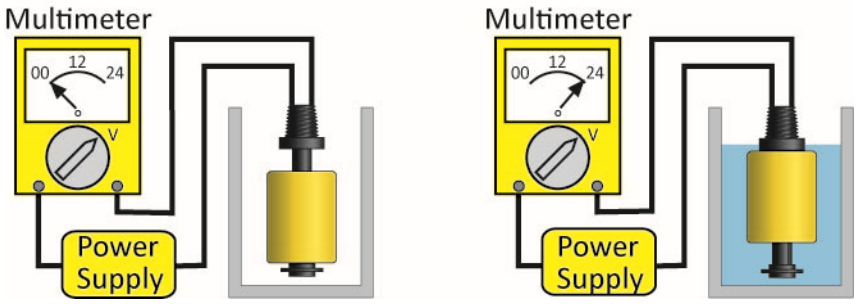

EXAMPLE

Test the LV20 or LH25 series with a Multimeter that is set to read Volts. When wired NO the meter will read 0 volts when dry and full voltage when wet.

WARRANTY

Flowline warrants to the original purchaser of its products that such products will be free from defects in material and workmanship under normal use and service in accordance with instructions furnished by Flowline for a period of two years from the date of manufacture of such products. Flowline's obligation under this warranty is solely and exclusively limited to the repair or replacement, at Flowline's option, of the products or components, which Flowline's examination determines to its satisfaction to be defective in material or workmanship within the warranty period. Flowline must be notified pursuant to the instructions below of any claim under this warranty within thirty (30) days of any claimed lack of conformity of the product. Any product repaired under this warranty will be warranted only for the remainder of the original warranty period. Any product provided as a replacement under this warranty will be warranted for the full two years from the date of manufacture.

RETURNS

Products cannot be returned to Flowline without Flowline's prior authorization. To return a product that is thought to be defective, go to flowline.com, and submit a customer return (MRA) request form and follow the instructions therein. All warranty and non-warranty product returns to Flowline must be shipped prepaid and insured. Flowline will not be responsible for any products lost or damaged in shipment.

LIMITATIONS

This warranty does not apply to products which: 1) are beyond the warranty period or are products for which the original purchaser does not follow the warranty procedures outlined above; 2) have been subjected to electrical, mechanical or chemical damage due to improper, accidental or negligent use; 3) have been modified or altered; 4) anyone other than service personnel authorized by Flowline have attempted to repair; 5) have been involved in accidents or natural disasters; or 6) are damaged during return shipment to Flowline. Flowline reserves the right to unilaterally waive this warranty and dispose of any product returned to Flowline where: 1) there is evidence of a potentially hazardous material present with the product; or 2) the product has remained unclaimed at Flowline for more than 30 days after Flowline has dutifully requested disposition. This warranty contains the sole express warranty made by Flowline in connection with its products. ALL IMPLIED WARRANTIES, INCLUDING WITHOUT LIMITATION, THE WARRANTIES OF MERCHANTABILITY AND FITNESS FOR A PARTICULAR PURPOSE, ARE EXPRESSLY DISCLAIMED. The remedies of repair or replacement as stated above are the exclusive remedies for the breach of this warranty. IN NO EVENT SHALL FLOWLINE BE LIABLE FOR ANY INCIDENTAL OR CONSEQUENTIAL DAMAGES OF ANY KIND INCLUDING PERSONAL OR REAL PROPERTY OR FOR INJURY TO ANY PERSON. THIS WARRANTY CONSTITUTES THE FINAL, COMPLETE AND EXCLUSIVE STATEMENT OF WARRANTY TERMS AND NO PERSON IS AUTHORIZED TO MAKE ANY OTHER WARRANTIES OR REPRESENTATIONS ON BEHALF OF FLOWLINE. This warranty will be interpreted pursuant to the laws of the State of California. If any portion of this warranty is held to be invalid or unenforceable for any reason, such finding will not invalidate any other provision of this warranty.

For complete product documentation, video training, and technical support, go to flowline.com.
For phone support, call 562-598-3015 from 8am to 5pm PST, Mon - Fri.
(Please make sure you have the Part and Serial number available.)