Switch-Pro™ LC4X

Remote or Isolation Level Switch Controllers

FLOWLINE™ LEVEL BEST

Application

Available in CSA approved, general purpose (LC4X), the level switch controller is offered in three configurations for pump and valve control. The LC40 accepts one level switch input and provides one 10A relay. The LC41 accepts two level switch inputs and provides one latching 10A relay for automatic fill or empty control. The LC42 accepts three level switch inputs with one latching 10A relay output for automatic fill or empty control, and a second non-latching 10A relay for high level alarm or low level alarm. Select controller type and model based on your control requirements. For field mount installation, add a single or double NEMA box with optional flash and/or audible alarm.

IP 65



LC40-1001
Shown



LC42-1001
Shown

Features

- Fail-safe relay control of pumps or valves with 0-60 second delay
- Easy setup with LED indicators for sensor, power and relay status
- 35mm DIN rail mount PP enclosure with removable terminal strips
- Invert switch changes relay state from NO to NC without rewiring
- Available with custom NEMA boxes and tank alarm accessories

Key Benefits

- Controls pumps, valves, horns and alarm indicators
- Available in general purpose
- Complete solution for level switch control requirements
- 35mm DIN rail or screw mount inside panel or NEMA box

Compatible Products



LU10

SWITCH-TEK™

Ultrasonic Level Switch

Broadly applied in chemicals and light weight oils



LZ12

SWITCH-TEK™

Vibration Level Switch

Applied in wastewater with light coating or scaling



LV10

SWITCH-TEK™

Vertical Buoyancy Level Switch

Applied in clean water and non-coating chemicals

Switch-Pro™ LC4X

Remote Level Switch Controllers

FLOWLINE™ LEVEL BEST

Specifications

Supply voltage:	120 / 240 VAC @ 50-60 Hz.
Consumption:	5 watts maximum
Sensor inputs:	LC40: (1) Two wire level switch LC41: (2) Two wire level switches LC42: (3) Two wire level switches
Sensor supply:	13.5 VDC @ 27 mA
LED indication:	Sensor, power & relay
Contact type:	LC40: (1) SPDT relay LC41: (1) SPDT latching relay LC42: (2) SPDT relays (one latching)
Contact rating:	250 VAC @ 10A
Contact output:	Selectable NO / NC
Contact latch:	LC40: N/A LC41: Selectable ON/OFF LC42: Selectable ON/OFF
Contact delay:	0.15 - 60 seconds
Ambient temp.:	F: -40° to 140° C: -40° to 60°
Pressure:	Atmospheric
Enclosure type:	35mm DIN rail
Encl. material:	PP, UL94VO
Classification:	LC4X: General purpose

Dimensions

Top View

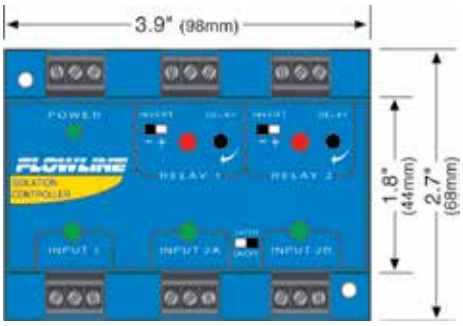

Side View

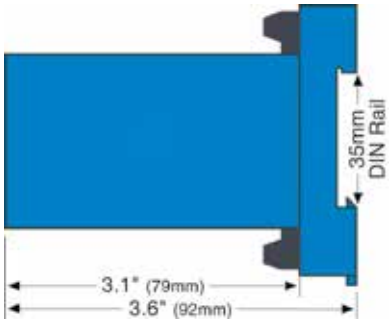

Accessories

Protect your level controller from the elements using the below single or double NEMA boxes that come with 35mm DIN rail mounting hardware.

	P/N	DESCRIPTION
	**LM92-1202**	Single NEMA box, windowed, 35mm rail, PC
	**LM92-2202**	Double NEMA box, windowed, 35mm rail, PC

Ordering

LC4 [ ] -1001

ENCLOSURE MOUNT (1)

- **0** 1 Relay / 1 sensor
- **1** 1 Latching relay / 2 sensors
- **2** 2 Relays (1 latching) / 3 sensors

NOTES

1) For field mount installation in a NEMA 4X polycarbonate enclosure, order the single or double NEMA box.