Thermo-Flo™ LC82

Remote Flow Switch Controllers

FLOWLINE™
LEVEL BEST

Application

The general purpose flow switch controller is designed for low-flow pump and process protection. The LC82 accepts two flow switch inputs and provides two 10A relays for dual low flow control. Package this flow switch controller with our liquid or gas flow switch sensors. For field mount installation, add a single or dual controller NEMA box.



LC82-1001
Shown

IP 65

Features

- Fail-safe relay control of pumps or valves with 0-60 second delay
- Easy setup with LED indicators for sensor, power and relay status
- 35mm DIN rail mount PP enclosure with removable terminal strips
- Invert switch changes relay state from NO to NC without rewiring
- Available with custom NEMA boxes and alarm accessories

Key Benefits

- Controls pumps, valves, horns and alarm indicators
- Available in general purpose configuration
- Complete solution for flow switch control requirements
- 35mm DIN rail or screw mount inside panel or NEMA box

Compatible Products



FT10

THERMO-FLO™

Thermal Dispersion Flow Switch

Broadly applied in water like liquids



GT10

THERMO-FLO™

Thermal Dispersion Flow Switch

Broadly applied in gas applications

Thermo-Flo™ LC82

Remote Flow Switch Controllers

Specifications

Supply voltage:	120 / 240 VAC @ 50-60 Hz.
Consumption:	5 watts maximum
Sensor inputs:	(2) Four-wire flow switches
Sensor supply:	13.5 VDC @ 100 mA
LED indication:	Sensor, power & relay
Contact type:	(2) SPDT relays
Contact rating:	250 VAC @ 10A
Contact output:	Selectable NO / NC
Contact latch:	LC82: Selectable ON/OFF
Contact delay:	0.15 - 60 seconds
Ambient temp.:	F: -40° to 158°
	C: -40° to 70°
Pressure:	Atmospheric
Enclosure type:	35mm DIN rail
Encl. material:	PP, UL94VO
Classification:	General purpose
Approvals:	CSA, LR 79326

Dimensions

Top View

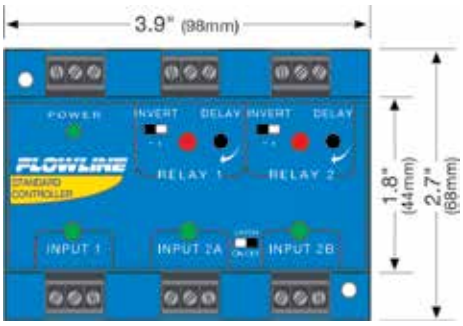

Side View

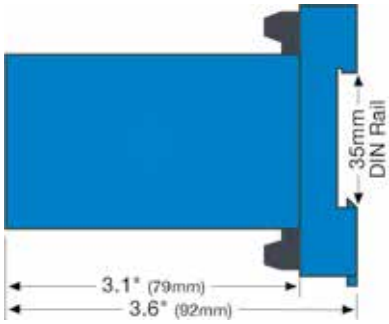

Accessories

Protect your level controller from the elements using the below single or double NEMA boxes that come with 35mm DIN rail mounting hardware.

	P/N	DESCRIPTION
	**LM92-1202**	Single Controller NEMA box, windowed, 35mm rail, PC
	**LM92-2202**	Dual Controller NEMA box, windowed, 35mm rail, PC

Ordering

LC82-1001 (1) (2)

NOTES

1) The flow switch controller is compatible with Thermo-Flo liquid and gas flow sensors.
2) For field mount installation in a NEMA 4X polycarbonate enclosure, order the single or double NEMA box.