Thermo-Flo™ FT10/GT10 Liquid & Gas Flow Switch

Application

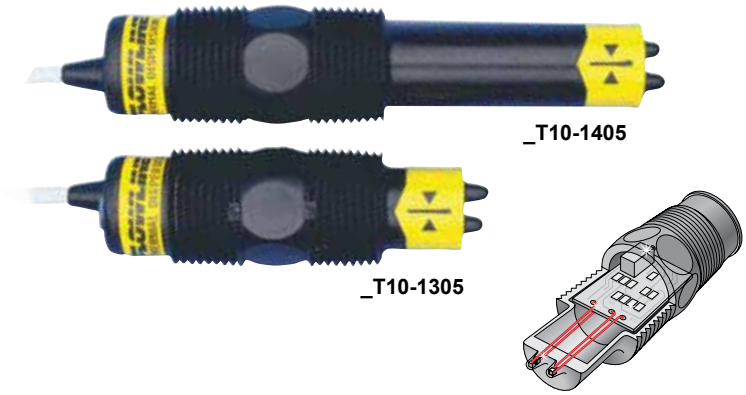

Offered in liquid and gas sensor types, the general purpose flow switch provides reliable low or no-flow detection of relatively clean, non-coating media with one 1A relay output. Liquid examples include water and acetic acid. Available in Polypropylene-Ryton® and PVDF, the short flow sensor is used in pipe or ducting from 1/2” to 1 1/2”, and the long flow sensor is used in 2” and up. The flow switch set point may be adjusted from 0.04 to 3 fps in liquids, or 1 to 90 fps in gases as a low-flow alarm. The flow sensor is best applied in applications with relatively constant temperature.

Features

- Rugged Polypropylene-Ryton® or PVDF sensor for corrosive liquids and gases
- Adjustable set point with LED for flow or no-flow status indication
- 60VA relay selectable NO or NC via power supply wiring polarity
- Solid state sensor is not damaged by over-ranging flow velocities

Key Benefits

- Ideal for monitoring chemical feed pumps
- Use to monitor flow/no-flow conditions
- Add FT50-_000 for metering pump/tubing installations

Compatible Products

Thermo-Flo™ Remote Level Controller



Application

The general purpose flow controller is offered in two configurations for low-flow pump and process protection. The LC80 accepts one flow sensor input and provides one 10A relay for low flow control. The LC82 accepts two flow sensor inputs and provides two 10A relays for dual low flow control. Package this flow controller with our liquid or gas flow switch sensors. For field mount installation, add a single or dual controller NEMA box.

Thermo-Flo™ Compact Level Controller



Application

The general purpose flow controller accepts one flow sensor input, and provides one 16A relay for low-flow pump or process protection. The optional flash alarm brings attention to low-flow alarm conditions. Package this flow controller with our liquid or gas flow switch sensors.

Thermo-Flo™ FT10/GT10 Liquid & Gas Flow Switch

Specifications

Set point range:	FT10: 0.04 to 3 fps (0.012 to 0.91 mps) GT10: 1 to 90 fps (0.3 to 27 mps)
Factory set point:	FT10: 2fps (.06 mps) GT10: 10 fps (3 mps)
Repeatability:	± 0.5% of set point @ fixed temperature
Response time:	1-10 seconds
Set point adjust.:	Potentiometer
Viscosity range:	FT10: 1-200 centipoise
LED indication:	Flow status
Supply voltage:	14-36 VDC
Consumption:	70 mA maximum
Contact type:	(1) SPST relay
Contact rating:	60 VA, 1A maximum
Contact output:	Selectable NO / NC
Process temp.:	F: 32° to 140° C: 0° to 60°
Ambient temp.:	F: -40° to 140° C: -40° to 60°
Pressure:	150 psi (10 bar) @ 25º C, derated @ 1.667 psi (0.113 bar) per ºC above 25º C
Sensor rating:	NEMA 4X (IP65)
Wetted material:	-1XX5: PP-Ryton® -5XX5: PVDF
Cable jack. mat.:	-1XX5: PP -5XX5: FEP
Cable type:	4-conductor, shielded #22 AWG
Cable length:	10’ (3m)
Process mount:	3/4” NPT (3/4” G/R)
Mount. gasket:	Viton®
Classification:	General purpose
Compliance:	CE

Dimensions

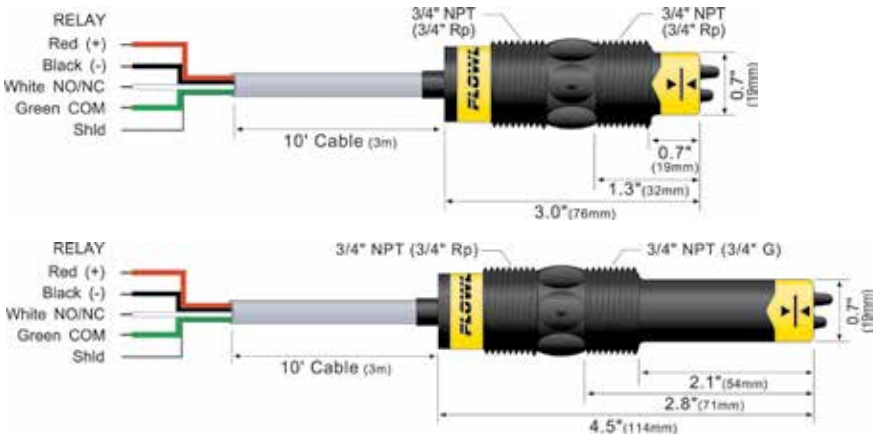

Accessories

If the required FT10 application experiences conditions of pulsing flow, please consider the Flow Switch Fitting below.



P/N	Description
FT50-5000	Flow Switch Fitting

Mounting

FT10/GT10 Special Mounting Instructions

When using any type of fitting, the orientation as well as the insertion depth of the flow switch in the pipe is critical. Recommended orientation and depth is represented by the following diagram. For more information reference the FT10/GT10 manual at www.flowline.com/technical_lit.php



Ordering

□T10-□□□5

Application media
- F Liquid
- G Gas

Sensor material (1)
- 1 PP / Ryton
- 5 PVDF

Sensor length (2)
- 3 Short
- 4 Long

Process mount (3)
- 0 NPT (US)
- 2 G (Metric)

Notes

1) To special order a 25’ (7.6m) or 50’ (15.2 m) flow sensor cable, place the cable length at the end of the part number (ie: FT10-1305-25’). Contact factory for pricing special lengths.
2) Order the short sensor for use with pipe sizes from 3/4”-1 1/2” (D25-D50), and the long sensor for 2” and higher (D63 up).
3) The long metric flow sensor has straight G threads on the sensing side, and conical R threads on the cable side of the wrench flat.