Smart Trak™

w/ Compact Junction Box

FLOWLINE™
LEVEL BEST

AU18, AU28, AU38, AU48, AV16, AV26, AV36, AV46, AZ18, AZ28, AZ38 & AZ48 Series
Owner's Manual



Specifications

Length:	8" to 10' (20 cm to 3m)
Accuracy:	±1 mm in water
Repeatability:	±0.5mm in water
Orientation:	± 20˚ vertical
Switch points:	1 to 4 (field adjustable)
Process temp.:	F: -40˚ to 176˚ C: -40˚ to 80˚
Installed height:	5.7" (144mm) above tank process mount
Pressure:	Atmospheric
Enclosure rating:	NEMA 4X (IP65)
Encl. material:	PP, UL94VO
Termination:	12-poles socket
Conduit entrance:	Single, 1/2" NPT
Wetted material:	PP (20% glass fill)
Process mount:	2" NPT (2" G)

ULTRASONIC SENSOR

Supply voltage:	12-36 VDC
Consumption:	25 mA maximum
Contact type:	(1) SPST relay
Contact rating:	60 VA, 1A max.
Cable type:	4-conductor / sensor, #22 AWG (shielded)
Contact output:	Selectable NO/NC
CE compliance:	EN 50082-2 immunity EN 55011 emission EN 61010-1 safety

VIBRATION SENSOR

Supply voltage:	12-30 VDC
Consumption:	25 mA maximum
Contact type:	(1) SPST relay
Contact rating:	60 VA, 1A max.
Cable type:	5-conductor / sensor, #24 AWG (shielded)
Contact output:	Selectable NO/NC
CE compliance:	EN 50082-2 immunity EN 55011 emission EN 61010-1 safety

BUOYANCY SENSOR

Contact type:	(1) SPDT reed
Contact rating:	15 VA
Cable type:	3-conductor / sensor, #22 AWG (shielded)
Contact output:	Selectable NO/NC
CE compliance:	EN50082-2 immunity EN 55011 emission EN61010-1 safety

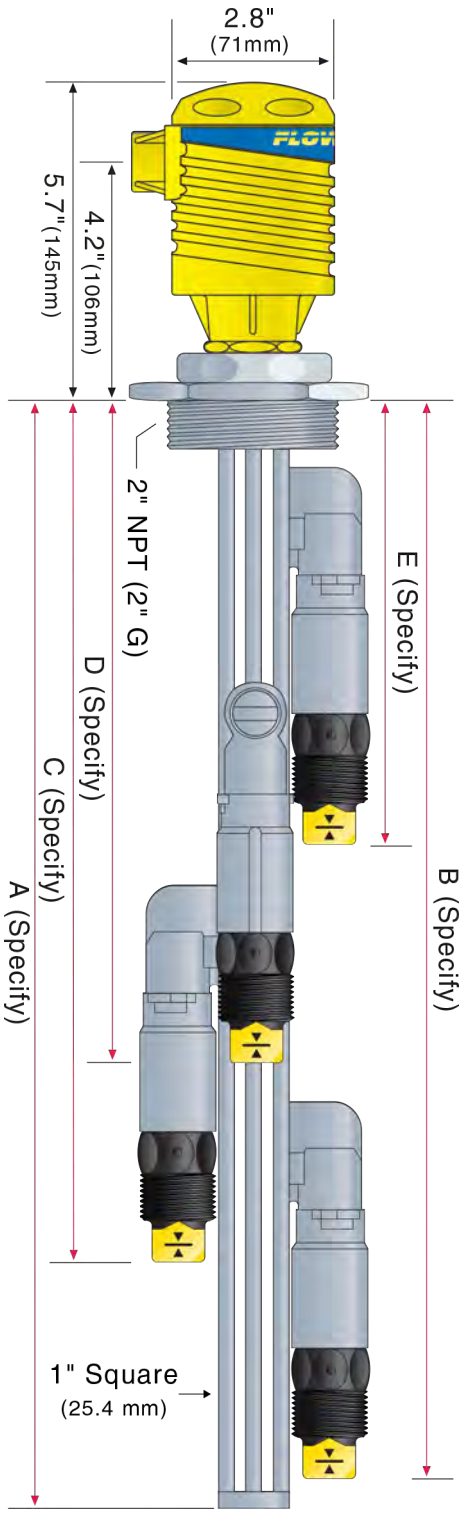

ONE SENSOR CONFIGURATION:
(AU18-434_, AV16-434_ or AZ18-434_)

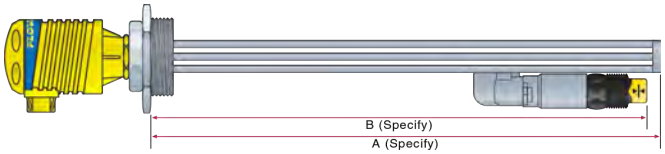

Ultrasonic	Buoyancy	Vibration
AU18-4343	**AV16-4343**	**AZ18-4343**
1 x LU10-1305	1 x LV10-1301	1 x LZ12-1405
1 x LM10-1_01	1 x LM10-1_01	1 x LM10-1_01
1 x LM30-1001	1 x LM30-1001	1 x LM30-1001
1 x LC05-1001	1 x LC05-1001	1 x LC05-1001
AU18-4347	**AV16-4347**	**AZ18-4347**
1 x LU10-1325	1 x LV10-1351	1 x LZ12-1405
1 x LM10-1_61	1 x LM10-1_61	1 x LM10-1_61
1 x LM30-1051	1 x LM30-1051	1 x LM30-1001
1 x LC05-1051	1 x LC05-1051	1 x LC05-1051

TWO SENSORS CONFIGURATION:
(AU28-434_, AV26-434_ or AZ28-434_)

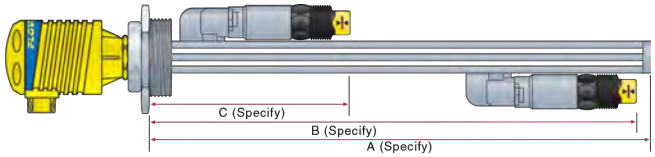

Ultrasonic	Buoyancy	Vibration
AU28-4343	**AV26-4343**	**AZ28-4343**
2 x LU10-1305	2 x LV10-1301	2 x LZ12-1405
1 x LM10-1_01	1 x LM10-1_01	1 x LM10-1_01
2 x LM30-1001	2 x LM30-1001	2 x LM30-1001
1 x LC05-1001	1 x LC05-1001	1 x LC05-1001
AU28-4347	**AV26-4347**	**AZ28-4347**
2 x LU10-1325	2 x LV10-1351	2 x LZ12-1405
1 x LM10-1_61	1 x LM10-1_61	1 x LM10-1_61
2 x LM30-1051	2 x LM30-1051	2 x LM30-1001
1 x LC05-1051	1 x LC05-1051	1 x LC05-1051

THREE SENSORS CONFIGURATION:
(AU18-434_, AV16-434_ or AZ18-434_)

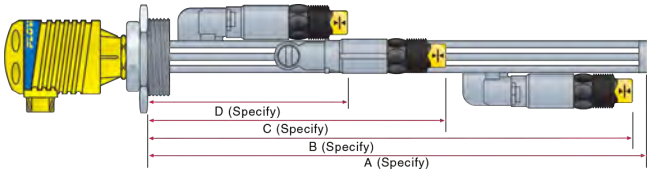

Ultrasonic	Buoyancy	Vibration
AU38-4343	**AV36-4343**	**AZ38-4343**
3 x LU10-1305	3 x LV10-1301	3 x LZ12-1405
1 x LM10-1_01	1 x LM10-1_01	1 x LM10-1_01
3 x LM30-1001	3 x LM30-1001	3 x LM30-1001
1 x LC05-1001	1 x LC05-1001	1 x LC05-1001
AU38-4347	**AV36-4347**	**AZ38-4347**
3 x LU10-1325	3 x LV10-1351	3 x LZ12-1405
1 x LM10-1_61	1 x LM10-1_61	1 x LM10-1_61
3 x LM30-1051	3 x LM30-1051	3 x LM30-1001
1 x LC05-1051	1 x LC05-1051	1 x LC05-1051

FOUR SENSORS CONFIGURATION:
(AU28-434_, AV26-434_ or AZ28-434_)

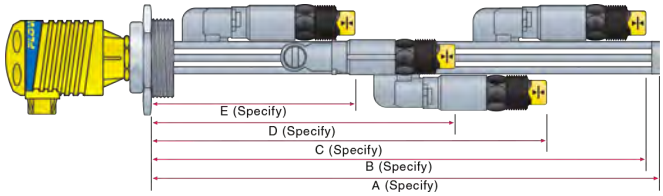

Ultrasonic	Buoyancy	Vibration
AU48-4343	**AV46-4343**	**AV48-4343**
4 x LU10-1305	4 x LV10-1301	4 x LZ12-1405
1 x LM10-1_01	1 x LM10-1_01	1 x LM10-1_01
4 x LM30-1001	4 x LM30-1001	4 x LM30-1001
1 x LC05-1001	1 x LC05-1001	1 x LC05-1001
AU48-4347	**AV46-4347**	**AZ48-4347**
4 x LU10-1325	4 x LV10-1351	4 x LZ12-1405
1 x LM10-1_61	1 x LM10-1_61	1 x LM10-1_61
4 x LM30-1051	4 x LM30-1051	4 x LM30-1001
1 x LC05-1051	1 x LC05-1051	1 x LC05-1051

COMPONENT LIST:



Smart Trak Fitting
P/N: LM10-1_01 or LM10-1_61



Compact Junction Box
P/N: LC05-1001 or LC05-1051

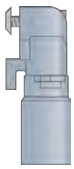

Switch Car Kit
P/N: LM30-1001 or LM30-1051



Switch-Tek Level Switch
P/N: LU10-1305. LU10-1325, LV10-1301, LV10-1351 or LZ12-1405

- **About this Manual:** PLEASE READ THE ENTIRE MANUAL PRIOR TO INSTALLING OR USING THIS PRODUCT. This manual includes information on the Smart Trak™ with Compact Junction Box: AU_8-434_, AZ_8-434_ and AV_6-434_. The units are identical except for the number of switch points and the sensors technology.

- **User's Responsibility for Safety**: Flowline manufactures a wide range of liquid level sensors, controllers, and mounting systems. It is the user's responsibility to select components that are appropriate for the application, install them properly, perform tests of the installed system, and maintain all components. The failure to do so could result in property damage or serious injury.

- **Proper Installation and Handling:** Use a proper sealant with all installations. Never over tighten the components. Always check for leaks prior to system start-up.

- **Material Compatibility:**
    - Glass filled Polypropylene (PP, a polyolefin): Track, end cap, wire retainer clips, bayonet adapter, level switch and sensor car for all Smart Trak Assemblies.
    - Polychlorotrifluoroethylene (PCTFE, a fluoroplastic): Sensor car locking bolt and screw.
    - Polypropylene (PP, a polyolefin): Sensor, top compression fitting, thrust plate, locking pin and 2" NPT fitting.
    - Viton (a fluorocarbon): O-ring.
    - Neoprene (w/silicon gel for lubrication): Wire gasket.
    - Santoprene (w/silicon gel for lubrication): Seal plug.

  Make sure that the application liquids are compatible with the materials that will be wetted. To determine the chemical compatibility between the components and its application liquids, refer to the Compass Corrosion Guide, available from Compass Publications.

- **Temperature and Pressure:** Smart Trak™ is designed for use in application temperatures up to 80° C (176° F). It is not designed for pressurized applications due to the wiring that must travel through a gasket at the head.

- **Wiring and Electrical:** Electrical wiring of any liquid level control system should be performed in accordance with all applicable national, state, and local codes. Take care not to cut or break the outer insulation jacket of wiring that may be immersed while routing cables in the Smart Trak™ system. Such breaks of the liquid seal of the sensor system may lead to component failure.

- **Flammable, Explosive and Hazardous Applications: DO NOT USE THE SMART TRAK AU_8, AV_6 or AZ_8 SERIES GENERAL PURPOSE SWITCH IN HAZARDOUS LOCATIONS.**

- **Make a Fail-Safe System:** Design a fail-safe system that accommodates the possibility of transmitter or power failure. In critical applications, Flowline recommends the use of redundant backup systems and alarms in addition to the primary system.

About Smart Trak™: Flowline's Smart Trak™ with Compact Junction Box Assembly is an adjustable mounting system for installing multiple level sensors vertically within a tank. Mounted through a single point at the top of the tank, up to 4 different sensors can be located at any depth on Smart Trak™. The compact junction box features termination for the various wires from each level switch as well as a 1/2" conduit connection. Smart Trak™ mounts vertically through a standard 2" NPT tank adapter, or on a side mount bracket (such as the LM50-1001). Unlike prefabricated "trees" or pipes, Smart Trak™ allows you to experiment with sensor position to account for variations in the point of actuation of each sensor during process testing.

Track: The track itself is approximately 1" square, and is from 8" to 10' long depending on the A-Dimension. The track may be cut to length if desired. Four separate grooves run the length of the track, one on each side of the square. These grooves hold the sensor cars that attach to Flowline sensors, and also serve to contain the switch cable. The bottom of the track is capped with an end cap.

Level Switches: Smart Trak™ will include from 1 to 4 level switches used to identify it's own unique wet / dry condition. The technologies used to indicate level are either Ultrasonic, Buoyancy or Vibration. Each technology features a unique wiring/power configuration (Ultrasonic and Vibration technologies require 12 to 36 VDC power for operation, see below). All of the switches are terminated in the Compact Junction Box. The Compact Junction Box provides a 1/2" Conduit connection and 12 poles for wire termination (for models AU45-434_ and AZ48-434_, common terminals such as Positive (+) and Negative (-) power must be shared).

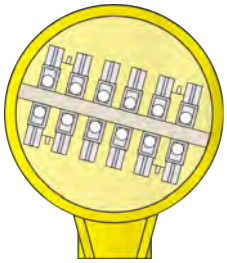

Compact Junction Box (inside shown)

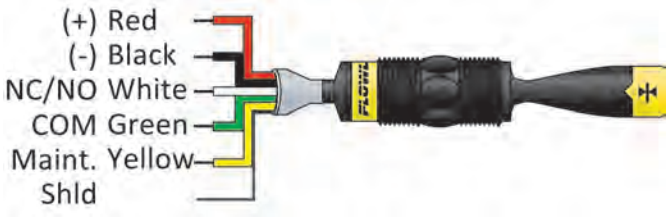

Vibration (LZ12-1405) Wire Configuration

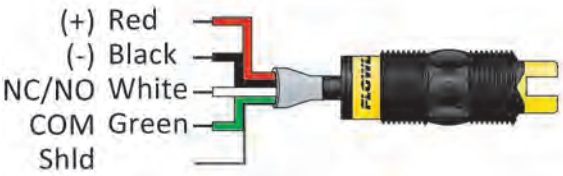

Ultrasonic (LU10-1305 or LU10-1325) Wire Configuration

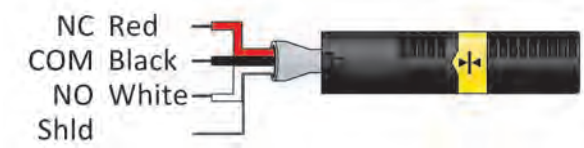

Buoyancy (LV10-1301 or LV10-1351) Wire Configuration

SMART TRAK™, IN-TANK INSTALLATION

Flowline's Smart Trak™ mounting system is an in-tank fitting, which enables users to install any technology, along the entire length of track. Smart Trak™ may be installed thru the top wall of any tank or flange, using a standard 2" NPT tank adapter or blind flange. If tank top is not available, Flowline's side mount bracket, LM50-1001, enables Smart Trak™ to be installed directly to the side wall or lip of the tank.

TANK ADAPTER:

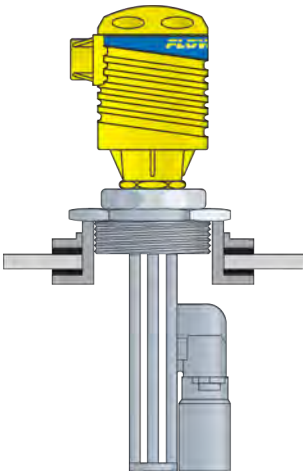

FLANGE MOUNTING:

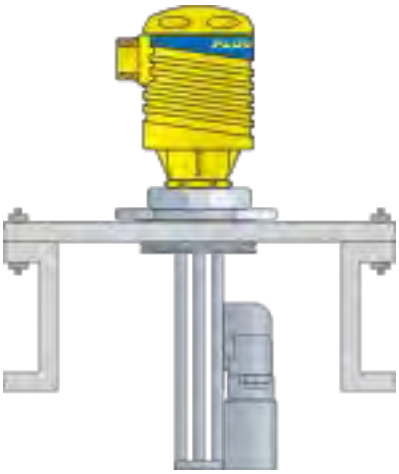

SIDE MOUNT BRACKET:

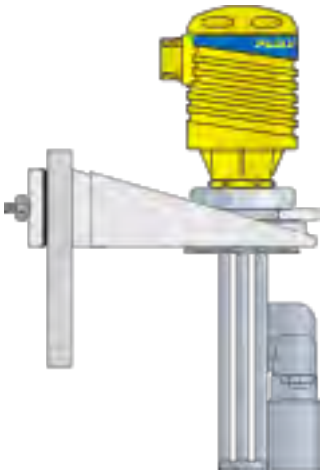

LIP OF TANK

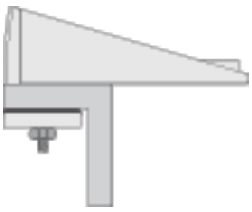

SIDE-WALL

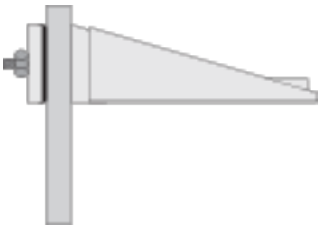

SMART TRAK™, INSTALLATION:

The Smart Trak™ with Compact Junction Box assembly is designed to be installed through a 2” NPT (2” G) thread. The level switches will be staggered through the fitting for installation.

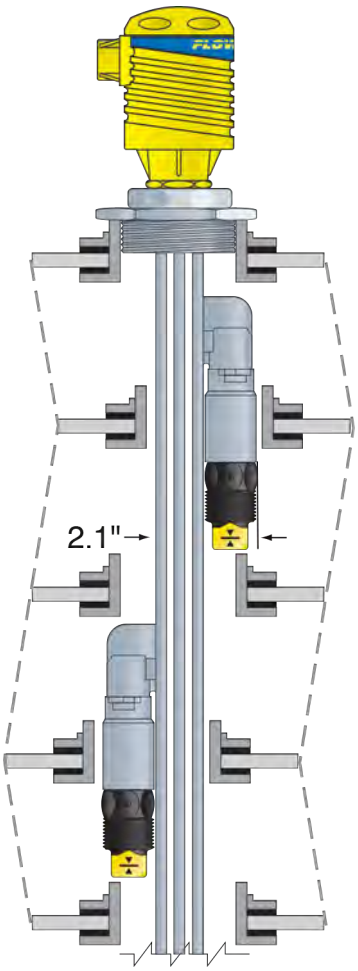

A key feature of Smart Trak™ is the adjustability of the level switches. When two level switches are placed close together, one of the switches will need to be moved to allow for the switches to be staggered into the installation fitting. Once installed, the level switch can be returned to its required position.

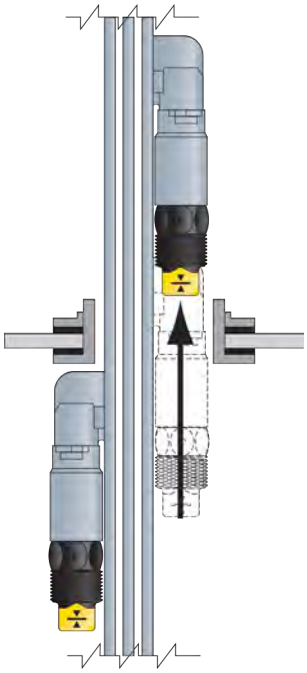

ULTRASONIC AND VIBRATION SWITCHES
(LU10-1305, LU10-1325, LZ12-1405):

The LU10-13_5 and LZ12-1405 switch can be wired normally open or normally closed for your application requirement. Each switch requires 12 - 36 VDC power (12-30 VDC, LZ12) to operate the sensor and switch the relay. The relay output can be wired as a dry contact. All illustrations below identify a Dry switch state as the normal position of the relay.

SWITCHING A NORMALLY OPEN DC LOAD:

The Red wire connects to Positive (+) of the power supply and the Black wire connects to Negative (-). The LOAD can be attached to either the Green or White wires. Complete the circuit by either connecting the Green to (+) VDC power or White to (-) VDC power (see illustration below).

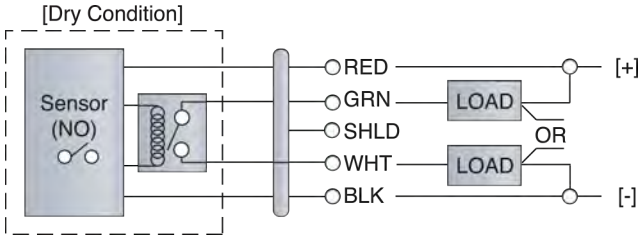

SWITCHING A NORMALLY CLOSED DC LOAD:

The Black wire connects to Positive (+) of the power supply and the Red wire connects to Negative (-). The LOAD can be attached to either the Green or White wires. Complete the circuit by either connecting the Green to (+) VDC power or White to (-) VDC power (see illustration below

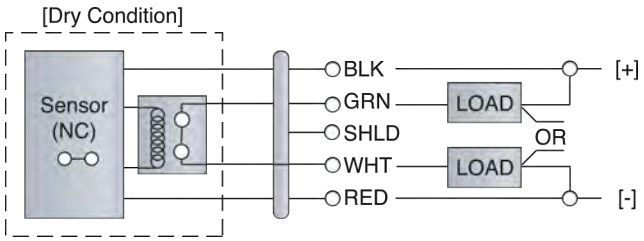

MAINTENANCE ALARM (LZ12 VIBRATION ONLY):

For optimum performance and proactive maintenance, the sensor automatically adjusts for coating, and if necessary, outputs a preventative maintenance alarm. The Yellow wire is a NPN transistor designed to switch when a build-up of material prevents the vibration switch from operating at its operational frequency. Use the Yellow wire to identify when the Vibration switch requires cleaning (see the LZ12 manual for wiring information).

BUOYANCY LEVEL SWITCH (LV10-1301 & LV10-1351):

The LV10-13_1 switch can be wired normally open or normally closed for your application requirement.

Normally Open:
Use the Black and White wires for operating the LV10-_3_1 in a normally open state. Normally open is defined as the switch being open when the float is dry and closed when the float becomes submersed. This operation is typical for indicating a high level.

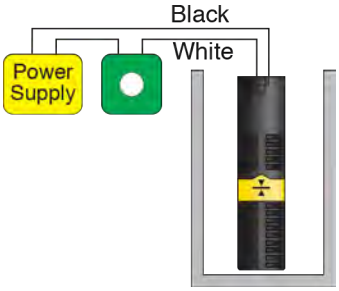

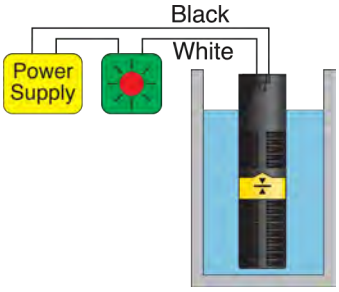

Normally Closed:
Use the Black and Red wires for operating the LV10-_3_1 in a normally closed state. Normally closed is defined as the switch being closed when the float is dry and open when the float becomes submersed. This operation is typical for indicating a low level.

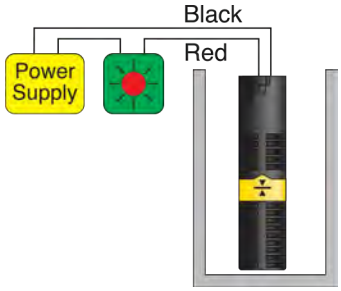

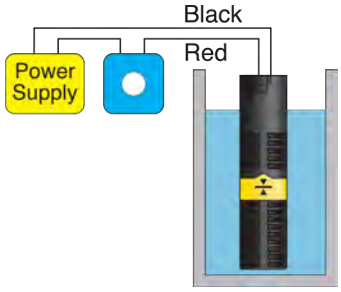

Wiring

Step Eight

SMART TRAK™ ASSEMBLY DRAWING (SIDE VIEW)

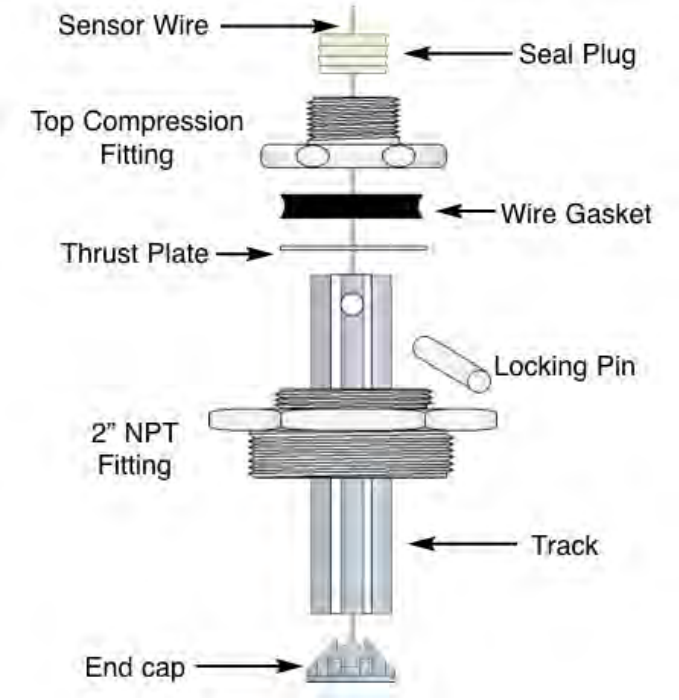

Inventory:
One Smart Trak™ kit (LM10-1__1) includes the following parts:

1 Seal Plug	1 Top compression fitting
1 Wire gasket	1 Thrust Plate
1 Locking pin	1 2" NPT fitting
1 Track	1 End cap

SMART TRAK™ ASSEMBLY DRAWING (TOP VIEW):

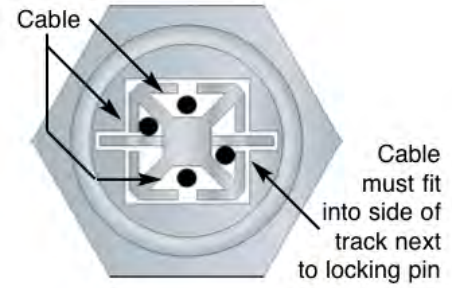

SEAL PLUG ASSEMBLY DRAWING (SIDE VIEW)

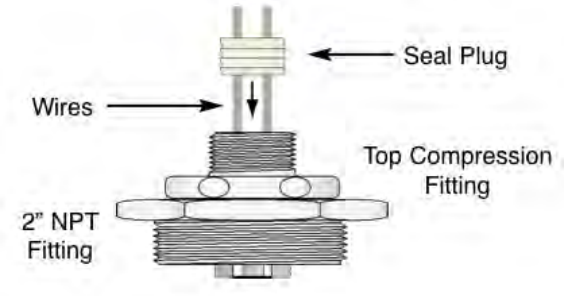

SENSOR CAR AND BAYONET ADAPTER:

The sensor car assembly is the heart of the Smart Trak™ system. It slides in the grooves of the track, and is locked into position by a plastic bolt and screw. The bayonet to 3/4" NPT adapter has a female 3/4" NPT fitting on one end where the sensor (not included) will screw in, and a bayonet fitting on the other end that attaches it onto the sensor car with a slight turn, with an O-ring in-between to provide tension for the push-and-turn connection.

SWITCH CAR KIT ASSEMBLY DRAWING (SIDE VIEW)

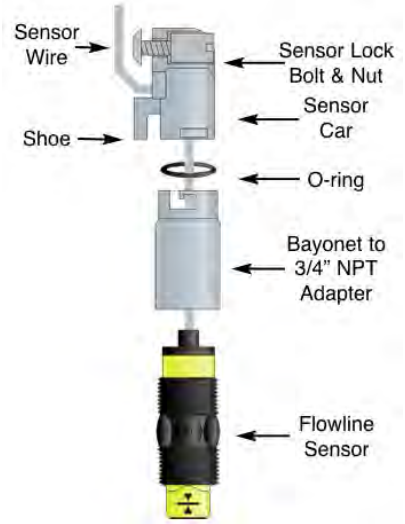

INVENTORY:

One switch car kit (LM30-10_1) consists of the following parts:

1 Locking bolt 1 Locking Nut
1 Sensor car 1 O-ring
1 Bayonet to 3/4" NPT adapter

SWITCH CAR KIT TO SMART TRAK™

(Top View) (Side View)

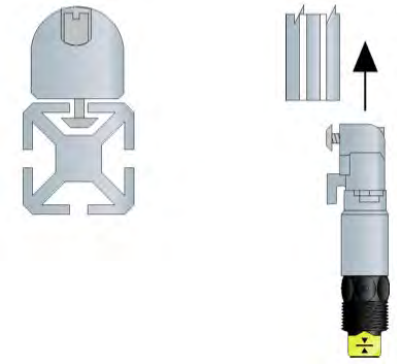

DETERMINE THE PROPER WIRE LENGTH:

Don't make the mistake of trimming the sensor wires too short before the process is tested. If the sensors might need to be lowered in the future, leave sufficient slack in the wires to allow for future adjustment. This extra wire may be stored in the bottom of the terminal strip housing, or elsewhere above the compression fitting.

GENERAL:

The Smart Trak™ with Compact Junction Box requires no periodic maintenance except cleaning as required. It is the responsibility of the user to determine the appropriate maintenance schedule, based on the specific characteristics of the application liquids.

CLEANING PROCEDURE:

1. **Power:** Make Sure that all power to the sensor, controller and/or power supply is completely disconnected.
2. **Sensor Removal:** Make sure that the tank is in a state where it is safe to remove the sensors. Carefully, remove the Smart Trak™ from the installation.
3. **Cleaning the Sensor:** Use a soft bristle brush and mild detergent, carefully wash the Smart Trak™. Do not use harsh abrasives such as steel wool or sandpaper, which might damage the surface sensor. Do not use incompatible solvents which may damage the sensor's PP or Ryton plastic body.
4. **Sensor Installation:** Follow the appropriate steps of installation as outlined in the installation section of this manual.

TESTING THE INSTALLATION:

1. **Power:** Turn on power to the switches and/or power supply.
2. **Immersing the switch:** Immerse the sensing tip of each switch in its application liquid, by filling the tank up to the switches point of actuation. An alternate method of immersing the switch during preliminary testing is to hold a cup filled with application liquid up to the switch's tip.
3. **Test:** With the switch being fluctuated between wet and dry states, the switch will open or close depending on wiring status. If the system doesn't have an input indicator, use a voltmeter or ammeter to ensure that the switch produces the correct signal.
4. **Point of actuation:** Observe the point at which the rising or falling fluid level causes the switch to changes state, and adjust the installation of the switch if necessary.

CURRENT TEST (ULTRASONIC AND VIBRATION ONLY):

Used to verify if the sensor is indicating a wet or dry condition. This test uses only two wires (Red and Black). The sensor draws 5 mA (ultrasonic) or 8 mA (vibration) when it is dry, and 19 mA when wet. The White and Green wires are not used.

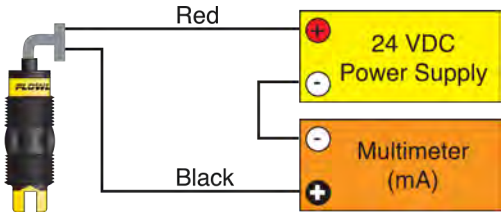

RELAY CONTACT TEST (ULTRASONIC AND VIBRATION ONLY):

Used to verify if the relay contact is switching between dry (open) and wet (closed). Test requires Red wired to Positive (+) and Black wired to Negative (-) on a 12 to 36 VDC power supply. Check for continuity across Green and White (open for dry and closed for wet). Reversing Red and Black wires will result in a closed when dry and open when wet condition.

NORMALLY OPEN WIRING:

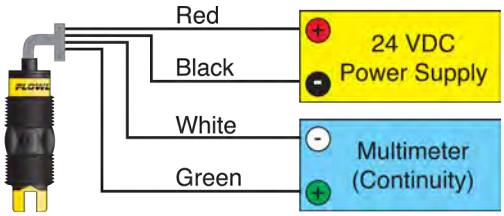

CONTACT TEST (BUOYANCY ONLY):

Used to verify if the reed switch is switching between dry (open) and wet (closed). Check for continuity across Black and White (open for dry and closed for wet). Checking across Black and Red will result in a closed when dry and open when wet condition.

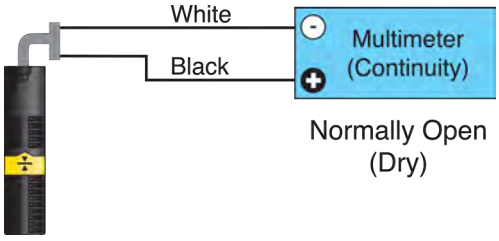

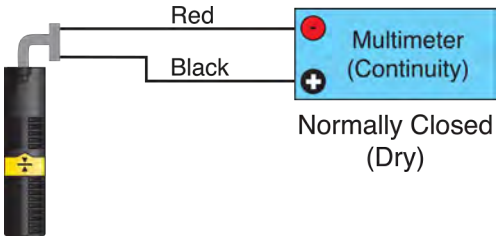

WARRANTY

Flowline warrants to the original purchaser of its products that such products will be free from defects in material and workmanship under normal use and service in accordance with instructions furnished by Flowline for a period of two years from the date of manufacture of such products. Flowline's obligation under this warranty is solely and exclusively limited to the repair or replacement, at Flowline's option, of the products or components, which Flowline's examination determines to its satisfaction to be defective in material or workmanship within the warranty period. Flowline must be notified pursuant to the instructions below of any claim under this warranty within thirty (30) days of any claimed lack of conformity of the product. Any product repaired under this warranty will be warranted only for the remainder of the original warranty period. Any product provided as a replacement under this warranty will be warranted for the full two years from the date of manufacture.

RETURNS

Products cannot be returned to Flowline without Flowline's prior authorization. To return a product that is thought to be defective, go to www.flowline.com, and submit a customer return (MRA) request form and follow the instructions therein. All warranty and non-warranty product returns to Flowline must be shipped prepaid and insured. Flowline will not be responsible for any products lost or damaged in shipment.

LIMITATIONS

This warranty does not apply to products which: 1) are beyond the warranty period or are products for which the original purchaser does not follow the warranty procedures outlined above; 2) have been subjected to electrical, mechanical or chemical damage due to improper, accidental or negligent use; 3) have been modified or altered; 4) anyone other than service personnel authorized by Flowline have attempted to repair; 5) have been involved in accidents or natural disasters; or 6) are damaged during return shipment to Flowline. Flowline reserves the right to unilaterally waive this warranty and dispose of any product returned to Flowline where: 1) there is evidence of a potentially hazardous material present with the product; or 2) the product has remained unclaimed at Flowline for more than 30 days after Flowline has dutifully requested disposition. This warranty contains the sole express warranty made by Flowline in connection with its products. ALL IMPLIED WARRANTIES, INCLUDING WITHOUT LIMITATION, THE WARRANTIES OF MERCHANTABILITY AND FITNESS FOR A PARTICULAR PURPOSE, ARE EXPRESSLY DISCLAIMED. The remedies of repair or replacement as stated above are the exclusive remedies for the breach of this warranty. IN NO EVENT SHALL FLOWLINE BE LIABLE FOR ANY INCIDENTAL OR CONSEQUENTIAL DAMAGES OF ANY KIND INCLUDING PERSONAL OR REAL PROPERTY OR FOR INJURY TO ANY PERSON. THIS WARRANTY CONSTITUTES THE FINAL, COMPLETE AND EXCLUSIVE STATEMENT OF WARRANTY TERMS AND NO PERSON IS AUTHORIZED TO MAKE ANY OTHER WARRANTIES OR REPRESENTATIONS ON BEHALF OF FLOWLINE. This warranty will be interpreted pursuant to the laws of the State of California. If any portion of this warranty is held to be invalid or unenforceable for any reason, such finding will not invalidate any other provision of this warranty.

For complete product documentation, video training, and technical support, go to www.flowline.com.
For phone support, call 562-598-3015 from 8am to 5pm PST, Mon - Fri.
(Please make sure you have the Part and Serial number available.)